JEFFERSON COUNTY DRAINAGE DISTRICT NO.6

PLANS FOR
MCLEAN RELIEF PROJECT

PROJECT BEGAN (ACTUAL WORK BEGAN):	DATE
PROJECT COMPLETED:	DATE
PROJECT CONSTRUCTED & FINAL PLANS:	✕ CONSTRUCTION AS-BUILT
FINAL CONSTRUCTION COST:	$
TCEQ PERMIT No.:	DD6 is MS4 Operator
GRADING PERMIT No.:	City of Beaumont
STREET-CUT & BARRICADE No.:	City of Beaumont
DRIVEWAY PERMIT No.:	City of Beaumont
BUILDING PERMIT No.:	NA
ELECTRICAL PERMIT No.:	NA
OTHER PERMIT No.:	NA
TDLR PROJECT No.:	NA

BOARD OF DIRECTORS

PRESIDENT:	JOSHUA W. ALLEN, SR.
VICE PRESIDENT:	BERNIE DALEO
SECRETARY:	CHARLES GUILLORY
DIRECTOR:	ANTHONY MALLEY, III
DIRECTOR:	CHARLES KIKER, III

INTERIM CHIEF OPERATING OFFICER

DOUG CANANT, P.E., R.P.L.S., C.F.M.

DISTRICT ENGINEER

WALLACE R. WILSON, P.E.

PROJECT:	MCLEAN RELIEF PROJECT
LIMITS:	Calhoun Avenue from Phelan Blvd. to Josey Street
PROJECT LOCATION:	Intersection of Calhoun Avenue & Mclean Street
COUNTY:	Jefferson County
DESCRIPTION:	For Construction & Relocation of Water, Sewer and Storm Utilities

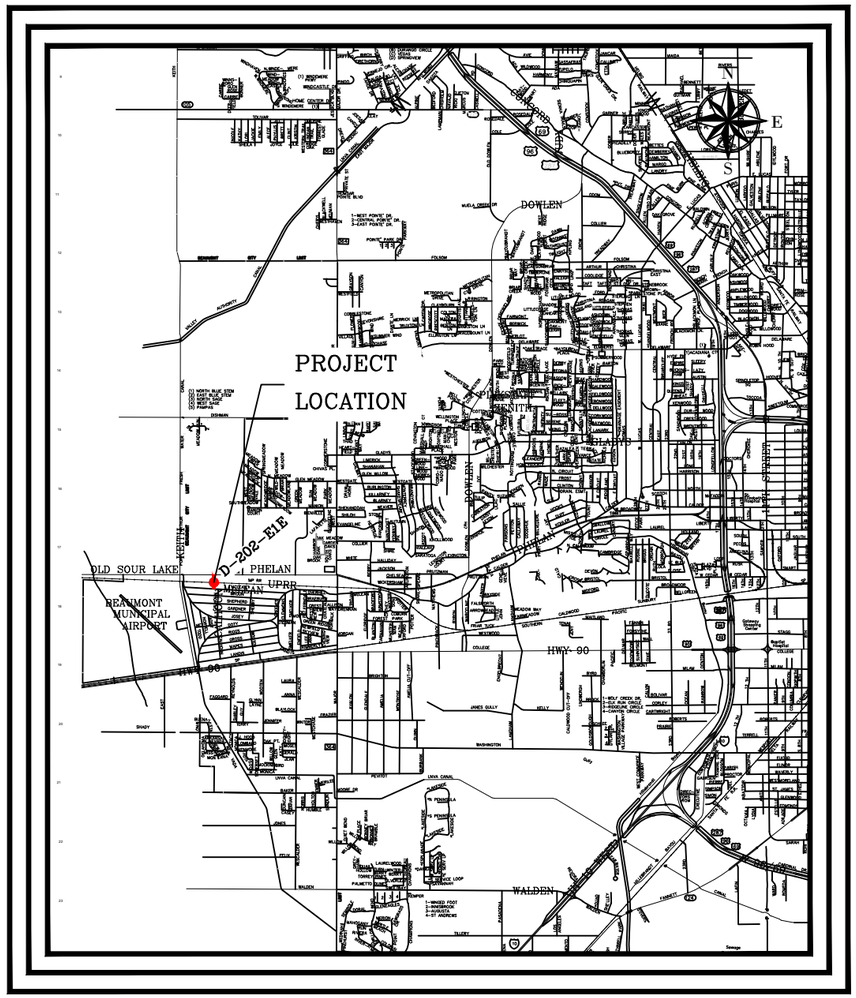

LOCATION MAP
SCALE: NTS

SEPTEMBER 2022

Wallace R. Wilson P.E. 10-03-22

APPROVED BY: DATE

WALLACE R. WILSON, P.E. No.84857

DISTRICT ENGINEER

STATE OF TEXAS
WALLACE R. WILSON
84857
LICENSED
PROFESSIONAL ENGINEER

INDEX OF SHEETS

- General

Sheet No.	Description
01	Title Sheet
02	Index Sheet
03A to 03E	General Notes
04A to 04B	Estimate & Quantity Sheets
05A to 05E	Summary of Quantities
06	Project Layout

- Road Details

Sheet No.	Description
07A to 07B	Phelan Blvd. Section and Asphalt Roadway Typical Section
07C	Calhoun Ave. Section – Asphalt
07D	Typical Section – Asphalt (All Other Streets)

- Traffic Control Plan

Sheet No.	Description
08a	Work Zone Road Closure Details: WZ(RCD)–13
08b	Traffic Control Plan: TCP(2–2)–18
09–20	BC Sheets: BC(1–12)–21

- Proposed Utilities & Drainage Details

Sheet No.	Description
21	Plan & Profile (Sta. 0+00 to 2+50) Phelan Blvd (Done by others)
22	Plan & Profile (Sta. 2+50 to 4+50) Ditch–202–E1 (Done by others)
23	Plan & Profile (Sta. 4+50 to 6+00) Union Pacific Railroad (Done by others)
24	Plan & Profile (Sta. 6+00 to 8+50) Detention Basin (Done by others)
25	Plan & Profile (Sta. 8+50 to 11+00) Detention Basin/Calhoun Ave (Basin done by others)
26	Plan & Profile (Sta. 11+00 to 13+50) Calhoun Ave
27	Plan & Profile (Sta. 13+50 to 16+00) Calhoun Ave
28	Plan & Profile (Sta. 16+00 to 18+50) Calhoun Ave
29	Plan & Profile (Sta. 18+50 to 21+00) Calhoun Ave
30	Plan & Profile (Sta. 21+00 to 23+00) Calhoun Ave
31	Plan & Profile (Sta. 23+00 to 25+50) Calhoun Ave
32	Plan & Profile (Sta. 25+50 to 27+00) Calhoun Ave
33	Plan & Profile (Sta. 0+00 to 2+50) Mclean Street
34	Plan & Profile (Sta. 2+50 to 5+00) Mclean Street
35	Plan & Profile (Sta. 0+00 to 2+50) Broun Street
36	Plan & Profile (Sta. 2+50 to 5+00) Broun Street
37	Plan & Profile (Sta. 0+00 to 2+50) Shepherd Street
38	Plan & Profile (Sta. 2+50 to 5+00) Shepherd Street
39	Plan & Profile (Sta. 5+00 to 5+65) Shepherd Street
40	Plan & Profile (Sta. 0+00 to 2+50) Gardner Street
41	Plan & Profile (Sta. 2+50 to 5+00) Gardner Street
42	Plan & Profile (Sta. 0+00 to 2+50) Josey Street
43	Plan & Profile (Sta. 2+50 to 3+50) Josey Street
44	Prop. Detention Basin & Ditch–202E1E Section (Done by others)
45	Prop. Aerial Pipeline Structure (Done by others)

- TxDOT Details

Sheet No.	Description
46	Concrete Wingwalls with Straight Wings
47	Concrete Headwalls with Flared Wings
48 to 51	Cast–In–Place Curb Inlet Outside Roadway
52	Concrete Curb & Curb & Gutter
53	Pipe and Box Grouted Connections
54	Box Culverts Miscellaneous Details
55 to 56	Joint Reinforced Concrete Pavement Details
57	Joint Seals
58	Temporary Erosion, Sediment and Water Pollution Control Measures – Construction Exits
59	Temporary Erosion, Sediment and Water Pollution Control Measures – Fence & Vertical Tracking
60 to 62	Temporary Erosion, Sediment and Water Pollution Control Measures – Erosion Control Logs

- Railroad & Phelan Blvd. Crossing Details (Done by others)

Sheet No.	Description
G1	Title Sheet
G2	Index Sheet
G3	General Notes & Specifications
G4	Estimate & Quantities
RCD–01	Railroad Overall Plan
RCD–02	Railroad Enlarged Plan
RCD–03	Railroad Cross Section
RCD–04	Shoring Details
RCD–05	Hydrology Data
RCD–06	Shoreloc Details
EC(3)–16	Construction Exit
EC(9)–16–1 to 3	Erosion Control Logs

- City of Beaumont Water and Sewer

Sheet No.	Description
H–1 to H–63	City of Beaumont Standard Details
F–238	City of Beaumont Plug Abandoned Sewer Specification (ITEM 4015)

PROJECT LOCATION

CITY	COUNTY	STATE
BEAUMONT	JEFFERSON	TEXAS
WATERSHED	DITCH NO.	SHEET
WILLOW MARSH	202–EIE	02

DRAINAGE DISTRICT NO. 6 JEFFERSON COUNTY, TEXAS

Mclean Relief Project
Index of Sheets

DATE 10–03–22

Walter R. Wilson P.E.

STATE OF TEXAS WALLACE R. WILSON 84857 LICENSED PROFESSIONAL ENGINEER

NO.	DATE	DRN	REVISION	APPROV.
6				
5				
4				
3				
2				
1		HEC		

General Notes and Specifications

1. The Texas Standard Specifications 2014 will govern all specifications not directly addressed in this document.

PHAS

2. Direct attention to comply with all ordinances and regulations of local municipal and county governments and the TCEQ (Texas Commission on Environmental Quality), which may be applicable on this project. **General Construction Permit** may be obtained online at **https://www.tceq.texas.gov/permitting/stormwater** through TCEQ. A Notice to Proceed will not be issued until all Permits are submitted to the City of Beaumont Public Works-Engineering Department for review. This will not be paid for directly and will be considered subsidiary to various bid items.

3. Any storm water permit and associated fees required for construction of this project shall be at the contractor's expense. Also, any temporary erosion, sediment and water control measures required shall be in accordance with the details shown in the plans, and all work and materials required will not be paid for directly but considered subsidiary to various bid items. Erosion control logs are to be utilized at every inlet within the affected area of construction and should remain in place throughout the duration of construction. Contractor shall submit SW3P plan prior to the start of construction. This will not be paid for directly and will be considered subsidiary to various bid items.

4. Storm water grading permit is required for this project and shall be filed by the contractor at the contractor's expense.

5. Procure all the necessary city and/or county permits and licenses before the start of this project. **Grading Permit** may be obtained through the City of Beaumont. Operation hours are Monday to Friday 8:00AM to 4:30PM. This will not be paid for directly and will be considered subsidiary to various bid items.

6. Before excavating near existing utilities, contact the utility companies or the utility coordinating committee for exact locations to prevent damage or interference with present facilities. Notify the utility coordinating committee and the Texas One Call System at the following numbers:

Texas One Call, toll-free 1-800-245-4545

AT&T Communications	Entergy Distribution	CenterPoint Energy Entex
555 Main - Room 20760	North 11th Street	6090 College
Beaumont, Texas 77701	Beaumont, Texas 77701	Beaumont, Texas 77707
(409) 839-1666	(409) 785-2136	(409) 860-7111
Ray Hillin	Brian Cross	Robert Young
Spectrum	City of Beaumont	City of Beaumont
602 N. Hwy 69	City Utilities	Public Works-Engineering
Nederland, Texas 77627	(409) 785-4720	(409) 880-3725
(409) 720-5565	Edward Brown	Molly Villarreal, P.E., CFM
Adam LaRive		

This action does not relieve the Contractor of the responsibilities under the terms of the contract or the plans and specifications. Damage caused by the Contractor's operations shall be repaired and restored to service in a timely manner at no expense to DD6.

7. The approximate location of the known underground utility installations is as shown on the plans. Confirm the location of these utility lines and the exact location of any others which may exist. Assume full responsibility for notifying the utility involved in case of conflict or damage, the contractor shall be responsible for damage that occurs due to the contractor's negligence. Remove and dispose of abandoned lines encountered that interfere with the construction of this project. Consider this work to be subsidiary to the various bid items of the contract.

8. Allow DD6 & City forces to enter this project to accomplish such work as shown in the plans (by others) and as may be deemed necessary.

9. The contractor shall maintain for the duration of this project, those sections of existing and proposed travel ways and appurtenances which are to be constructed, reconstructed, or modified under this project. Any portion of roadway and its appurtenances, inside or outside of the projects, that is damaged by the contractor's forces shall be repaired by the contractor at their expense.

10. Place all equipment and vehicles not in operation in the approved staging area.

11. To enter or exit the work area, the detention pond off of Todd St. shall be used. This pond is also to be used as the staging area.

12. Assume ownership for all designated waste material and dispose of offsite.

13. Take reasonable measures to avoid the death of any migratory birds, their young or their eggs.

14. Control the dust caused by construction operations. For sweeping, use one of the following types of sweepers or equal:

Tricycle Type	Truck Type -4 Wheel
Wayne Series 900	M-B Cruiser II
Elgin White Wing	Wayne Model 945
Elgin Pelican	Mobile TE-3
Mobile TE-4	Murphy 4042

15. The contractor shall be responsible for all maintenance of the travel way and appurtenances within the barricades during the contractor's portion of the project. Ingress and egress to adjacent property shall be maintained by the contractor at all times.

16. The contractor is to have an independent lab to sample all concrete and ACP and make and test all cylinders in accordance with the test methods provided for under the appropriate standard specifications for the various items. It is the responsibility of the Contractor to schedule testing with the independent lab atleast 48 hours in advance. If the Contractor schedules an independent lab for testing and cancels services, the contractor will be responsible for any charges that occur for cancellation.

PROJECT LOCATION

CITY	COUNTY	STATE
BEAUMONT	JEFFERSON	TEXAS
WATERSHED	DITCH NO.	SHEET
WILLOW MARSH	202-EIE	03A

DRAINAGE DISTRICT NO. 6 JEFFERSON COUNTY, TEXAS

General Notes & Specifications
MCLEAN RELIEF PROJECT

DATE 10-14-22

STATE OF TEXAS WALLACE R. WILSON 84857 LICENSED PROFESSIONAL ENGINEER

NO.	DATE	DRN	REVISION	APPROV.
1		HEC		
2				
3				
4				
5				
6				

17. The City of Beaumont will be inspecting the road work. Contact David Tingle at 409-880-3725.

18. If overhead or underground power lines need to be de-energized, contact the electrical service provider to perform this work. Costs associated with de-energizing the power lines or other protective measures required are at no expense to DD6. If working near power lines, comply with the appropriate sections of Texas State Law and Federal Regulations relating to the type of work involved.

19. Prior to final acceptance, all new and existing structures and extensions shall be cleaned and free of debris and dirt and all outfall channels unobstructed. This work will not be paid for directly but will be considered subsidiary to the various bid items.

20. Move existing signs, mailboxes, delineators and any other similar obstructions that interfere with construction to temporary locations. Move them back to their permanent positions when the work progresses to the point where this is possible. Place the sign post back in accordance with the applicable standard sheets. This will not be paid for directly and will be considered subsidiary to various bid items.

21. Maintain adequate drainage throughout the limits of the project during all construction phases.

22. Upon approval, vary the governing slopes shown on the typical sections as necessary.

23. Verify material quantities and dimensions prior to ordering materials.

24. The Contractor will establish the project control point, points, or tangency, PI's (points of intersection), point of curvature (PC, PI, and PT) and bench marks at the beginning and end of the project on the plan view only. Contractor shall establish and maintain these points throughout construction. There will be no separate payment for this work, but it shall be considered subsidiary to various bid items.

25. When design details are not shown on the traffic control plans, provide TCP conforming to the latest "Texas M.U.T.C.D." manual.

26. All materials, labor and incidentals required for the contractor to provide for traffic across the streets and for temporary ingress and egress to private property shall be furnished by the contractor at no additional cost to DD6 and shall be considered as subsidiary to the various bid items.

27. Any saw-cutting required for the project shall not be paid for directly but shall be considered subsidiary to various bid items.

28. The Contractor will notify the Engineer 48 hours in advance of completed work per site. The Engineer will inspect each site and submit a punch list per location to the Contractor as necessary. The Contractor will not demobilize from site until the Engineer has approved all work including punch list items.

29. Final surface courses are to be paved within four calendar days of paved level-up courses.

ITEM 5: CONTROL OF WORK

1. Station the project prior to commencing work. Mark the stations every 100 feet. Maintain stationing throughout the duration of the project. Remove the station markings at the completion of the project. Consider this work to be subsidiary to the various bid items of the contract.

ITEM 7: LEGAL RELATIONS AND RESPONSIBILITIES

1. Furnish all materials, labor and incidentals required to provide for traffic across the street and for temporary ingress and egress to private property in accordance with article 7.7 of the standard specifications at no additional cost. Consider this work to be subsidiary to the various bid items of the contract.

ITEM 8: PROSECUTION AND PROGRESS

1. Days will be charged as calendar days.

ITEM 9: MEASUREMENT AND PAYMENT

1. The Contractor shall submit all tickets, As-Built drawings and updated schedule with each pay request.
2. DD6 will withhold a 5% retainage from each pay request.

ITEM 100: PREPARING RIGHT OF WAY

1. Heavy equipment rutting shall be graded to the existing terrain profile every day.

ITEM 104: REMOVING CONCRETE

1. All concrete (sidewalks, driveways, slabs, pavement, etc.) will be saw cut full depth at the break back line. Saw cuts is not paid for directly but considered subsidiary to various bid items.

ITEM 110: EXCAVATION

1. If manipulating the excavated material requires moving the same material more than once to accomplish the desired results, the excavation is measured and paid for only once regardless of the number of manipulations required.

2. The removal of asphalt and/or concrete to perform the excavation for the installation of the water/sanitary sewer utilities will not be paid for but considered subsidiary to various bid items.

PROJECT LOCATION

CITY	COUNTY	STATE
BEAUMONT	JEFFERSON	TEXAS
WATERSHED	DITCH NO.	SHEET
WILLOW MARSH	202-EIE	03B

DRAINAGE DISTRICT NO. 6 JEFFERSON COUNTY, TEXAS

General Notes & Specifications
MCLEAN RELIEF PROJECT

DATE 10-14-22

STATE OF TEXAS WALLACE R. WILSON 84857 LICENSED PROFESSIONAL ENGINEER

NO.	DATE	DRN	REVISION	APPROV.
1		HEC		
2				
3				
4				
5				
6				

ITEM 275: CEMENT TREATMENT (ROAD-MIXED)

1. Provide 6% Cem-Lime or Cement slurry (By Weight).

2. Windrow scarified base material for backfilling edge of pavement. This work is not paid for directly but shall be considered subsidiary to various bid items of the contract.

3. Proof rolling will not be paid for directly but shall be considered subsidiary to various bid items of the contract.

4. The shoulders shall be cleaned so that the slurry mixing application is free of all vegetation/organic material.

ITEM 310: PRIME COAT

1. Use bituminous material of the type ***AE*** and grade ***P***. Distribute the bituminous material smoothly and evenly at the rate of ***0.20 GAL/SY.*** Application rate will be determined at Pre-pavement Meeting. Use blotter. This item shall not be paid for directly but shall be considered subsidiary to various bid items of the contract.

2. Allow for two (2) days minimum for the prime coat to cure, unless directed otherwise by the Engineer.

ITEM 340: DENSE GRADED HOT-MIX ASPHALT (SAC-B) (SMALL QUANTITY)

1. Tack coat shall be placed at a rate of ***0.10 GAL/SY.*** This will not be paid for directly but shall be considered subsidiary to various bid items of the contract.

2. Provide surface course mixture type F using PG binder 70-22. Grade bump will not be permitted for surface course.

3. Provide level-up course mixture type F using PG binder 70-22. Grade bump will not be permitted for level-up course.

4. All tests except gradation, asphalt content, compacted lift thickness, and compaction will be waived.

5. Saw cut all tie-ins to intersecting and continuing roadways to provide smooth transitions. Consider this work to be subsidiary to various bid items of the contract.

ITEM 400: EXCAVATION AND BACKFILL FOR STRUCTURES AND PIPES

1. Cement Stabilized Backfill shall consist of sand and cement only and shall consist of 1.5 sack of cement per Cubic Yard of sand for the utility installation. Cement Stabilized Backfill shall be mixed in a stationary plant of Pugmill type.

2. Cement Stabilized sand backfill shall be compacted in 6-inch lifts unless otherwise directed by the Engineer.

3. 3 sack of cement per Cubic Yard will be used by DD6 for the installation of the storm sewer.

ITEM 500: MOBILIZATION

1. Mobilization shall not exceed ten (10) percent of the total construction items amount.

ITEM 502: BARRICADES, SIGNS, AND TRAFFIC HANDLING

1. If the contractor want to change the traffic control plan (TCP), they must provide a layout showing the construction phasing, signs, striping, and signalizations for changes to the original TCP. This will be considered subsidiary.

2. Furnish and maintain the barricades and warning signs, including the necessary temporary and portable traffic control devices, during the various phases of construction. Place and construct these barricades and warning signs in accordance with the latest "Texas Manual on Uniform Traffic Control Devices for Streets and Highways" and BC sheets.

3. Cover work zone signs when work related to the signs is not in progress, or when any hazard related to the signs no longer exists.

4. Keep the delineation devices, signs, and pavement markings clean. This work is subsidiary to the Item, "Barricades, Signs, and Traffic Handling".

5. Do not mount signs on drums or barricades, except those listed in the latest Barricades and Construction standard sheets.

6. Drop-offs will not be allowed at the end of each day.

7. Remove all traffic control devices from the roadway, off of the right of way, when they are not in use. Devices scheduled to be used within 3 days may be placed along the shoulder of the roadway or right of way when not in use, or stored in other approved areas on the project. Cover any construction signs that are not in effect that are installed in a fashion that will not allow them to be removed from the right of way easily.

8. The Contractor shall submit an excel spreadsheet of streets and closure dates. Contact Antoinette Hardy at 409-880-3725, 72 hours in advance notice.

PROJECT LOCATION

CITY	COUNTY	STATE
BEAUMONT	JEFFERSON	TEXAS
WATERSHED	DITCH NO.	SHEET
WILLOW MARSH	202-EIE	03C

DRAINAGE DISTRICT NO. 6 JEFFERSON COUNTY, TEXAS

General Notes & Specifications
MCLEAN RELIEF PROJECT

DATE 10-14-22

Walter R. Wilson P.E.

STATE OF TEXAS
WALLACE R. WILSON
84857
LICENSED PROFESSIONAL ENGINEER

NO.	DATE	DRN	REVISION	APPROV.
1		HEC		
2				
3				
4				
5				
6				

9. It is the responsibility of the Contractor to notify commercial businesses and residential citizens of work to be performed 48 hours in advance.

10. The responsibility for maintaining the protection of the traveling public will be that of the contractor.

11. Use drums or vertical panels instead of cones as traffic control devices.

12. Provide flaggers, when needed, at each side-road intersection and ensure they have communication with the flaggers controlling the movement of traffic on the roadway.

ITEM 530: INTERSECTIONS, DRIVEWAYS, AND TURNOUTS

1. Excavation and grading required for the placement of the driveway asphalt will not be paid for directly but shall be considered subsidiary to this bid item.

2. All driveways and unimproved roadways will require a minimum 4-foot transition, actual transition lengths will be determined in the field.

3. Saw cut all tie-ins to intersecting and continuing roadways to provide smooth transitions. Consider this work to be subsidiary to various bid items of the contract.

ITEM 585: RIDE QUALITY FOR PAVEMENT SURFACES

1. Use Surface Test Type A (10' STRAIGHT EDGE) to evaluate ride quality of the travel lanes.

ITEM 752: TREE AND BRUSH REMOVAL

1. Remove and dispose of all trees with a diameter greater than 4" as shown on plans. Trees less than 4" are considered brush.

END OF SECTION

PROJECT LOCATION

CITY	COUNTY	STATE
BEAUMONT	JEFFERSON	TEXAS
WATERSHED	DITCH NO.	SHEET
WILLOW MARSH	202-EIE	03D

DRAINAGE DISTRICT NO. 6 JEFFERSON COUNTY, TEXAS

General Notes & Specifications
MCLEAN RELIEF PROJECT

Walter R. Wilson P.E.
DATE 10-14-22

STATE OF TEXAS
WALLACE R. WILSON
84857
LICENSED PROFESSIONAL ENGINEER

NO.	DATE	DRN	REVISION	APPROV.
6				
5				
4				
3				
2				
1		HEC		

SEQUENCE OF WORK

PHASE 1 - UTILITIES (CONTRACTOR)

PH. 1A - Contractor shall install the Traffic Control Plan (TCP) according to TxDOT WZ (RCD)-13: Road Closure Beyond the Intersection, on each side of Calhoun on McLean, Broun, Shepherd, Gardner, Josey, and Ney St. to close Calhoun during the duration of the project

PH. 1B - Contractor shall install the utilities as called out in the plans

PHASE 2 - STORM SEWER INSTALLATION (DD6)

PH. 2A - Install the storm sewer from McLean St. (STA. 10+18) to Ney St. (STA. 26+61)

PH. 2B - DD6 will compact and blade the base material

PH. 2C - DD6 will maintain the base along Calhoun and the side streets during the duration of the project

PHASE 3 - STORM SEWER INSTALLATION (CONT'D) (DD6)

PH. 3A - DD6 will install the storm sewer on McLean St. (STA 0+13 to STA 4+58)

PH. 3B - DD6 will install the storm sewer on Broun St. (STA 0+86 to STA 4+84)

PH. 3C - DD6 will install the storm sewer on Shepherd St. (STA 0+56 to STA 5+25)

PH. 3D - DD6 will install the storm sewer on Gardner St. (STA 0+51 to STA 4+78)

PH. 3E - DD6 will install the storm sewer on Josey St. (STA 0+94 to STA 3+25)

PHASE 4 - ROAD REHABILITATION (CONTRACTOR)

PH. 4A - The contractor shall rehabilitate Calhoun as called out in the plans

PH. 4B - After Calhoun is reconstructed, the driveway tie-ins will be installed

PH. 4C - The side streets, (McLean, Broun, Shepherd, Gardner, and Josey) will be reconstructed as called out in the plans

PH. 4D - After the side streets are reconstructed, the driveway tie-ins will be installed

PROJECT LOCATION

CITY	COUNTY	STATE
BEAUMONT	JEFFERSON	TEXAS
WATERSHED	DITCH NO.	SHEET
WILLOW MARSH	202-EIE	03E

DRAINAGE DISTRICT NO. 6 JEFFERSON COUNTY, TEXAS

General Notes & Specifications

MCLEAN RELIEF PROJECT

DATE 10-14-22

Walter R. Wilson P.E.

STATE OF TEXAS WALLACE R. WILSON 84857 LICENSED PROFESSIONAL ENGINEER

NO.	DATE	DRN	REVISION	APPROV.
1		HEC		
2				
3				
4				
5				
6				

Summary of Qty's.					
Item No.	Description Code	Description	Unit	Estimated Quantity	Final Quantity
100	001	Preparing Right of Way (Not to exceed $300 per station)	STA	51	
110	003	Excavation (Sewer Utility)(<10 FT.)	C.Y.	2,244	
110	004	Excavation (Water Utility)(<8 FT.)	C.Y.	1,041	
275	001	Cement Trt (Mix Existing Material) (8")	S.Y.	8,110	
340	001	D-GR HMA TY-F PG70-22 (1.25") (Wearing Surface)	Ton	553	
340	002	D-GR HMA TY-F PG70-22 (1.25") (Level-Up)	Ton	553	
400	002	Cem Stab Bkfl (1.5 Sk/CY Sand) for Structures & Pipe (Water & Sewer)	C.Y.	875	
500	001	Mobilization (Not to exceed 10% of the total construction items amount)	L.S.	1	
502	001	Barricades, Signs, and Traffic Handling	Month	15	
530	002	Intersections, Driveways, and Turnouts (ACP)	S.Y.	946	
702	001	Furnish & Install 8" Sanitary Sewer Lines, Utilizing 8-inch PVC SDR-26, Complete in Place. (Open Trench)	L.F.	130	
702	002	Furnish & Install 10" Sanitary Sewer Lines, Utilizing 10-inch PVC SDR-26, Complete in Place. (Open Trench)	L.F.	1,110	
702	003	Furnish & Install 4" Sanitary Sewer Lines, Utilizing 4-inch PVC SDR-26, Complete in Place. (Open Trench)	L.F.	50	
708	001	Manholes - Furnish & Install Fiberglass Manholes(<10 FT.), Complete in Place, all in strict accordance with plans and City of Beaumont Specifications. To include Frame,Grates, Rings and Covers.	Ea.	5	
708	002	Manholes - Remove & Replace Exist. Sanitary Sewer Structures w/Fiberglass Manholes(<10 FT.), Complete in Place, all in strict accordance with plans and City of Beaumont Specifications. To include Frame,Grates, Rings and Covers.	Ea.	3	
752	001	Tree Removal (24" Diameter)	Ea.	4	
752	001	Brush Removal	Ea.	1	
801	001	Furnish & Install 6" MJ with 45 degree bend w/Thrust Blocking, Complete in Place.	Ea.	29	
801	002	Furnish & Install 6" MJ with 90 degree bend w/Thrust Blocking, Complete in Place.	Ea.	1	
801	003	Furnish & Install 6"x6" MJ Cross, Complete in Place.	Ea.	3	
801	004	Furnish & Install 6"x6" MJ Tee, Complete in Place.	Ea.	1	
801	005	Furnish & Install 6" Adapter, Prop. 6" Watermain to Exist. 6" Watermain (Various Material Type), Complete in Place.	Ea.	11	
808	001	Furnish & Install Fire Hydrant Assembly, To Include Valves,Tie-In & Thrust Blocking Complete in Place.	Ea.	2	
808	002	Remove & Salvage Existing Fire Hydrant Assembly, Complete in Place.	Ea.	2	
810	001	Furnish & Install 6" vc class 150-C-900 PVC waterline, Complete in Place.	L.F.	1,680	
811	001	Furnish & Install 6" Resilient Wedge Gate Valve & Valve Box as per Sections 805 and 811 of the specifications, Complete in Place.	Ea.	17	
2505	001	Furnish & Install 1" HDPE PE3408 SDR-9, 200 psi short side service connections, all in strict accordance with plans and City of Beaumont Specifications. (Water)	Ea.	4	
2505	002	Furnish & Install 1" HDPE PE3408 SDR-9, 200 psi long side service connections, all in strict accordance with plans and City of Beaumont Specifications. (Water)	Ea.	28	
2534	001	Replacement of 4" short side service connection up to property line, w/4" PVC Schedule 40 pipe, complete in place, all in strict accordance with plans and City of Beaumont Specifications.(Sewer)	Ea.	1	
2534	002	Replacement of 4" long side service connection up to property line, w/4" PVC Schedule 40 pipe, complete in place, all in strict accordance with plans and City of Beaumont Specifications.(Sewer)	Ea.	1	
4015	001	Plug Abandoned Sewers (ITEM 4015 per City of Beaumont standards)	Ea.	4	

NO.	DATE	DRN	REVISION	APPROV.
6				
5				
4				
3				
2				
1		HEC		

STATE OF TEXAS
WALLACE R. WILSON
84857
LICENSED PROFESSIONAL ENGINEER

Estimate & Quantities
MCLEAN RELIEF PROJECT

Wallace R. Wilson P.E.

DATE 10-03-22

DRAINAGE DISTRICT NO. 6 JEFFERSON COUNTY, TEXAS DD6

PROJECT LOCATION		
CITY	COUNTY	STATE
BEAUMONT	JEFFERSON	TEXAS
WATERSHED	DITCH NO.	SHEET
WILLOW MARSH	202-E1E	04A

Summary of Roadway Quantities for the construction of the Asphalt Pavement*

Location (Sheet No.)	275		**310		340		530	
	Cement Treatment (Road Mixed)		Prime Coat (AE-P) (For the Asphalt Pavement)		D-GR HMA TY-F PG70-22 (1.25") (Wearing Surface)	D-GR HMA TY-F PG70-22 (1.25") (Level-Up)	Driveways and Turnouts	
							Driveways	Aprons
	S.Y.	Ton	***Gal	****Gal	Ton	Ton	Ton	
Calhoun Ave. (SH. 25 - 32)	3006.67	70.36	270.60	541.20	204.64	204.64	18.16	3.60
Mclean (SH. 33 - 34)	993.33	23.24	89.40	178.80	67.61	67.61	7.38	0.00
Broun (SH. 35 - 36)	1124.67	26.32	101.76	203.51	76.95	76.95	9.87	3.04
Shepherd (SH. 37 - 39)	1217.78	28.50	109.60	219.20	82.89	82.89	9.69	4.53
Gardner (SH. 40 - 41)	997.78	23.35	89.80	179.60	67.91	67.91	7.36	2.34
Josey (SH. 42 - 43)	770.00	18.02	69.67	139.33	52.69	52.69	4.55	0.99

* For informational purposes only. Contractor will need to verify once on site.
** Item will not be paid for but shall be considered subsidiary to Item 275 - Cement Treatment
*** Minimum Rate = .10 Gal per S.Y.
**** Maximum Rate = .20 Gal per S.Y.

PROJECT LOCATION

CITY	COUNTY	STATE
BEAUMONT	JEFFERSON	TEXAS
WATERSHED	DITCH NO.	SHEET
WILLOW MARSH	202-EIE	04B

DRAINAGE DISTRICT NO. 6 JEFFERSON COUNTY, TEXAS

Estimate & Quantities
MCLEAN RELIEF PROJECT

DATE 10-03-22

Walter R. Wilson P.E.

STATE OF TEXAS
WALLACE R. WILSON
84857
LICENSED PROFESSIONAL ENGINEER

NO.	DATE	DRN	REVISION	APPROV.
1		HEC		
2				
3				
4				
5				
6				

	6"-Watermain (L.F.)	6"-90°	6"-45°	6"-Coupling	6"-Cross	6"-Tee	6"-Valve	FH & Valve Asy.	Remove FH
Mclean		1		1			1		
Broun			8	2	1		4	1	1
Shepherd			8	2	1		4	1	1
Gardner			9	3	1		5		
Josey			4	3		1	3		
Calhoun	1,490								

	4"-Sewer (L.F.)	8"-Sewer (L.F.)	10"-Sewer (L.F.)	Fiberglass MH	Concrete MH
Mclean					
Broun					
Shepherd					
Gardner					
Josey					1
Calhoun	50	130	1,110	7	

Summary of Concrete Curb to Remove & Replace

Station to Station		Left/Right	Length (ft)
	1+03	lt/rt	45
	1+40	lt/rt	45
		Total	90

Summary of Concrete Pavement to Remove & Replace

Station to Station		Length (ft)	Width (ft)	Depth (in)	Area (sy)	Volume (cy)
0+98	1+03	5	45	6	25.0	4.2
1+03	1+40	37	45	10	185.0	51.4
1+52	1+57	5	45	6	25.0	4.2
				Total	235.0	59.7

Summary of Existing Driveways

Driveway No.	Station	Side	Width (Ft)	Area (S.F.)	Depth (Ft)	Volume (C.Y.)
01	11+67	Lt	18	334.4	0.5	6.2
02	11+51	Rt	22	309.6	0.5	5.7
03	12+13	Rt	12	164.2	0.5	3.0
04	13+39	Lt	17	265.3	0.5	4.9
05	14+68	Rt	35	562	0.5	10.4
06	15+88	Rt	15	244.8	0.5	4.5
07	16+52	Rt	20	329.3	0.5	6.1
08	16+66	Lt	25	418	0.5	7.7
09	17+96	Rt	22	510.4	0.5	9.5
10	18+19	Lt	30	328.6	0.5	6.1
11	18+71	Rt	27	437.9	0.5	8.1
12	19+42	Rt	19	328.3	0.5	6.1
13	19+76	Rt	29	487.1	0.5	9.0
14	--	--	--		0	0.0
15	24+92	Rt	25	344.6	0.5	6.4
16	25+86	Rt	14	238.8	0.5	4.4
17	24+22	Lt	17	338	0.5	6.3
18	24+93	Lt	24	480	0.5	8.9
19	25+61	Lt	20	337	0.5	6.2
20	13+91	Rt	17	317	0.5	5.9
21	14+09	Lt	18	311	0.5	5.8
					Total =	131.2

Summary of Proposed Driveways

Driveway No.	Station	Side	Width (Ft)	Area (S.F.)	Depth (Ft)	Volume (C.Y.)
01	11+67	Lt	18	307.5	0.5	5.7
02	11+51	Rt	22	367.6	0.5	6.8
03	12+13	Rt	12	217.5	0.5	4.0
04	13+39	Lt	17	292.5	0.5	5.4
05	14+68	Rt	35	562.5	0.5	10.4
06	15+88	Rt	15	262.5	0.5	4.9
07	16+52	Rt	20	337.5	0.5	6.3
08	16+66	Lt	25	412.5	0.5	7.6
09	18+19	Lt	22	367.5	0.5	6.8
10	17+96	Rt	30	487.5	0.5	9.0
11	18+71	Rt	27	442.5	0.5	8.2
12	19+42	Rt	19	322.5	0.5	6.0
13	19+76	Rt	29	472.5	0.5	8.8
14	--	--	--	0	0	0.0
15	24+92	Rt	25	412.4	0.5	7.6
16	25+86	Rt	14	292.5	0.5	5.4
17	24+22	Lt	17	302.9	0.5	5.6
18	24+93	Lt	24	437.7	0.5	8.1
19	25+61	Lt	20	392.6	0.5	7.3
20	13+91	Rt	17	307.5	0.5	5.7
21	14+09	Lt	18	314.5	0.5	5.8
					Total =	135.4

PROJECT LOCATION

CITY	COUNTY	STATE
BEAUMONT	JEFFERSON	TEXAS
WATERSHED	DITCH NO.	SHEET
WILLOW MARSH	202-EIE	05A

DRAINAGE DISTRICT NO. 6 JEFFERSON COUNTY, TEXAS

Summary of Quantities
MCLEAN RELIEF PROJECT

DATE 10-03-22

Walter R. Wilson P.E.

STATE OF TEXAS
WALLACE R. WILSON
84857
LICENSED PROFESSIONAL ENGINEER

NO.	DATE	DRN	REVISION	APPROV.
6				
5				
4				
3				
2				
1		HEC		

Estimate of Excavation

Item		Station to Station		Description	Acreage	Sq. Ft.	Ave. Depth (ft)	Total		
Item No.	Description Code							Unit	Estimated Quantity	Final Quantity
110	001	0+00	2+00	Phelan	0.04	1,665	6	cy	370	
110	002	6+00	10+00	Detention Basin	5.88	255,940	6	cy	56,876	
110	003	10+00	27+00	Calhoun-Storm	0.74	32,420	6	cy	7,204	
110	004	11+00	23+50	Calhoun-Sewer	0.17	7,575	8	cy	2,244	
110	005	11+00	22+00	Calhoun-Water	0.16	7,025	4	cy	1,041	
110	006	0+00	4+75	Mclean	0.05	2,090	6	cy	464	
110	007	0+00	5+00	Broun	0.05	2,180	6	cy	484	
110	008	0+00	5+65	Shepherd	0.06	2,570	6	cy	571	
110	009	0+00	5+00	Gardner	0.05	2,270	6	cy	504	
110	010	0+00	3+50	Josey	0.03	1,310	6	cy	291	

Estimate of Backfill

Item		Station to Station		Description	Area (S.F.)	Length (Ft)	Tons/C.Y.	Total		
Item No.	Description Code							Unit	Estimated Quantity	Final Quantity
400	001	0+00	2+00	Phelan	216.00	200	1.4	Ton	2,240	
400	002	10+00	14+25	Calhoun-Storm 4 Barrell	94.00	425	1.4	Ton	2,071	
400	003	14+25	20+75	Calhoun-Storm 3 Barrell	70.50	650	1.4	Ton	2,376	
400	004	20+75	23+90	Calhoun-Storm 2 Barrell	47.00	315	1.4	Ton	768	
400	005	23+90	27+00	Calhoun-Storm 1 Barrell	23.50	310	1.4	Ton	378	
400	006	11+00	17+25	Calhoun-Sewer	9.00	625	1.4	Ton	292	
400	007	17+25	23+50	Calhoun-Sewer	9.00	625	1.4	Ton	292	
400	008	11+00	24+20	Calhoun-Water	9.00	1320	1.4	Ton	616	
400	009	0+00	4+75	Mclean	22.84	475	1.4	Ton	563	
400	010	0+00	5+00	Broun	22.84	500	1.4	Ton	592	
400	011	0+00	5+65	Shepherd	22.84	565	1.4	Ton	669	
400	012	0+00	5+00	Gardner	22.84	500	1.4	Ton	592	
400	013	0+00	3+50	Josey	22.84	350	1.4	Ton	415	

12"-16" Flexible Base (Ty-A/Grade-2)(Ordinary Compaction),Complete in Place

Item		Station to Station		Description	Width (Ft)	Length (Ft)	Depth (Ft)	Unit Weight (Lbs/Ft^3)	Total		
Item No.	Description Code								Unit	Estimated Quantity	Final Quantity
247	001	10+61	14+18	Calhoun	20	357	1.4	140	Ton	699.7	
247	001	14+18	20+78	Calhoun	16	660	1.4	140	Ton	1,034.9	
247	001	20+78	23+83	Calhoun	10	245	1.4	140	Ton	240.1	
247	001	23+83	26+61	Calhoun	6	278	1.4	140	Ton	163.5	
247	001	0+00	4+75	Mclean	4	475	1.4	140	Ton	186.2	
247	001	0+00	5+00	Broun	4	500	1.4	140	Ton	196.0	
247	001	0+00	5+25	Shepherd	4	525	1.4	140	Ton	205.8	
247	001	0+00	5+00	Gardner	4	500	1.4	140	Ton	196.0	
247	001	0+00	3+50	Josey	4	350	1.4	140	Ton	137.2	

PROJECT LOCATION

CITY	COUNTY	STATE
BEAUMONT	JEFFERSON	TEXAS
WATERSHED	DITCH NO.	SHEET
WILLOW MARSH	202-EIE	05B

DRAINAGE DISTRICT NO. 6 JEFFERSON COUNTY, TEXAS

Summary of Quantities
MCLEAN RELIEF PROJECT

DATE 10-03-22

Walter R. Wilson P.E.

STATE OF TEXAS WALLACE R. WILSON 84857 LICENSED PROFESSIONAL ENGINEER

NO.	DATE	DRN	REVISION	APPROV.
1		HEC		
2				
3				
4				
5				
6				

Pipe Name	Start Invert	End Invert	Slope	Start Structure	End Structure	Start Station	End Station	Length(Ft)	Size
Brn-01	25.24	26.00	-1.800%	Fitting	Earthen Channel	0+93.20	1+41.60	48.40	24 inch HP Storm
Brn-04	26.97	27.00	-0.150%	Fitting	Earthen Channel	0+57.60	0+34.00	23.60	24 inch HP Storm
Brn-05	26.97	27.04	-0.150%	Fitting	Earthen Channel	0+57.17	0+06.00	51.17	24 inch HP Storm
Brn-08	25.21	26.00	-4.110%	Fitting	Earthen Channel	92.25	01+16.00	23.75	24 inch HP Storm
Brn-09	25.09	25.39	-0.150%	Fitting	SI	0+88.22	2+87.39	199.17	24 inch HP Storm
Brn-10	25.39	26.00	-4.050%	SI	SI	2+87.39	2+87.26	15.11	24 inch HP Storm
Brn-11	25.39	26.00	-3.840%	SI	Earthen Channel	2+87.39	2+87.52	15.93	24 inch HP Storm
Brn-12	25.39	25.68	-0.150%	SI	SI	2+87.39	4+83.76	196.37	24 inch HP Storm
Brn-13	25.68	26.00	-1.850%	SI	Earthen Channel	4+83.76	4+83.90	17.08	24 inch HP Storm
Brn-14	25.68	26.00	-2.040%	SI	Earthen Channel	4+83.76	4+83.79	15.51	24 inch HP Storm
Cal-01	24.96	24.99	-0.030%	Detention Basin	Fitting	9+99.75	10+88.65	88.90	42 inch HP Storm
Cal-02	24.96	24.99	-0.030%	Detention Basin	Fitting	10+02.43	10+94.39	91.96	42 inch HP Storm
Cal-03	24.96	24.99	-0.030%	Detention Basin	Fitting	10+04.13	10+92.03	87.90	42 inch HP Storm
Cal-04	24.96	24.99	-0.030%	Detention Basin	Fitting	10+05.14	10+88.54	83.40	42 inch HP Storm
Cal-05	24.99	25.09	-0.030%	Fitting	Junction Box	10+95.47	14+20.68	326.02	42 inch HP Storm
Cal-06	24.99	25.33	-0.040%	Fitting	Junction Box	10+97.05	20+80.41	983.80	42 inch HP Storm
Cal-07	24.99	25.33	-0.030%	Fitting	Conc. Channel	10+99.43	20+89.54	989.97	42 inch HP Storm
Cal-08	24.99	25.33	-0.030%	Fitting	Conc. Channel	11+01.82	20+89.54	987.57	42 inch HP Storm
Cal-13	25.37	25.44	-0.030%	Conc. Channel	Fitting	21+48.16	23+86.15	237.99	42 inch HP Storm
Cal-14	25.37	25.52	-0.030%	Conc. Channel	Fitting	21+48.16	26+26.55	479.06	42 inch HP Storm
Cal-15	25.53	25.55	-0.040%	Junction Box	Junction Box	26+26.55	26+61.44	35.10	42 inch HP Storm
Cal-19	26.00	26.01	-0.150%	Earthen Channel	Junction Box	11+15.43	11+15.40	3.46	24 inch HP Storm
Cal-20	26.37	26.41	-0.150%	Earthen Channel	Earthen Channel	11+30.00	11+74.00	44.00	24 inch HP Storm
Cal-22	26.00	26.01	-0.150%	Earthen Channel	Junction Box	11+06.12	11+06.13	5.87	24 inch HP Storm
Cal-23	25.00	25.02	-0.050%	Fitting	Earthen Channel	10+93.36	10+95.47	28.81	24 inch HP Storm
Cal-24	26.39	26.46	-0.150%	Earthen Channel	Earthen Channel	11+47.00	12+03.00	56.00	24 inch HP Storm
Cal-25	26.35	26.39	-0.100%	SI	Earthen Channel	13+64.84	13+20.00	45.00	24 inch HP Storm
Cal-25A	26.00	25.20	-5.740%	SI	Fitting	13+67.18	13+81.14	13.96	24 inch HP Storm
Cal-33	25.50	25.50	0.000%	Junction Box	Earthen Channel	26+26.55	26+28.19	20.22	24 inch HP Storm
Cal-34	25.97	26.00	-0.150%	Junction Box	Earthen Channel	26+26.55	26+28.82	23.31	24 inch HP Storm
Cal-35	25.27	25.32	-0.100%	Fitting	Earthen Channel	17+13.24	16+43.00	70.24	24 inch HP Storm
Cal-36	26.55	26.60	-0.080%	Fitting	Earthen Channel	17+13.24	16+31.00	82.24	24 inch HP Storm
Cal-37	25.41	25.47	-0.150%	Earthen Channel	SI	19+96.33	19+56.97	39.35	24 inch HP Storm
Cal-38	25.47	25.51	-0.150%	SI	Earthen Channel	19+56.97	19+27.97	29.00	24 inch HP Storm
Cal-39	26.53	26.59	-0.110%	Fitting	Earthen Channel	17+48.00	18+23.00	75.00	24 inch HP Storm
Cal-40	25.79	25.84	-0.150%	Earthen Channel	Earthen Channel	24+74.78	25+09.78	35.00	24 inch HP Storm
Cal-41	25.93	25.97	-0.150%	Earthen Channel	Earthen Channel	25+72.79	25+99.82	27.00	24 inch HP Storm
Cal-42	25.55	25.56	-0.150%	SI	Junction Box	26+61.44	26+62.02	10.85	24 inch HP Storm
Cal-43	26.47	26.50	-0.150%	Earthen Channel	Earthen Channel	11+97.00	12+31.00	34.00	24 inch HP Storm
Cal-44	25.40	25.67	-0.870%	Earthen Channel	Earthen Channel	17+97.00	18+41.00	44.00	24 inch HP Storm
Cal-45	25.53	25.60	-0.150%	Fitting	Earthen Channel	23+85.11	24+36.05	50.95	24 inch HP Storm
Cal-46	25.66	25.74	-0.150%	Earthen Channel	SI	24+76.21	25+28.40	52.21	24 inch HP Storm
Cal-47	25.88	25.95	-0.150%	SI	Earthen Channel	25+28.40	25+76.59	48.20	24 inch HP Storm
Cal-48	26.97	26.99	-0.150%	Fitting	Earthen Channel	13+82.04	13+60.20	22.04	24 inch HP Storm
Cal-49	26.97	27.08	-0.150%	Fitting	Earthen Channel	14+17.51	14+95.95	78.44	24 inch HP Storm
Cal-50	25.20	26.00	-5.130%	Fitting	Earthen Channel	14+18.33	14+39.94	21.61	24 inch HP Storm
Cal-51	25.32	25.34	-0.150%	Fitting	Earthen Channel	17+48.79	17+70.25	21.46	24 inch HP Storm
Cal-52	25.36	25.39	-0.150%	Fitting	Earthen Channel	20+80.15	20+96.67	16.52	24 inch HP Storm
Cal-53	25.34	25.36	-0.150%	Fitting	Earthen Channel	20+43.19	20+20.86	22.33	24 inch HP Storm
Cal-54	25.90	24.75	7.830%	Fitting	Earthen Channel	20+41.4	20+20.73	20.67	24 inch HP Storm
Cal-55	25.64	25.68	-0.150%	Fitting	Earthen Channel	23+76.87	24+07.30	30.43	24 inch HP Storm
Cal-56	25.61	25.64	-0.150%	Fitting	Earthen Channel	23+38.16	23+20.18	17.98	24 inch HP Storm
Cal-57	25.43	25.46	-0.170%	Fitting	SI	23+47.00	23+47.15	19.22	24 inch HP Storm
Cal-58	25.09	25.21	-4.110%	Fitting	Fitting	13+83.00	13+83.00	2.91	24 inch HP Storm
Cal-59	25.10	25.24	-1.800%	Junction Box	Fitting	14+00.00	14+00.00	7.74	24 inch HP Storm
Cal-60	26.96	26.97	-0.150%	Fitting	Fitting	13+83.00	13+83.00	4.36	24 inch HP Storm
Cal-61	26.96	26.97	-0.150%	Junction Box	Fitting	14+18.00	14+18.00	6.70	24 inch HP Storm
Cal-62	25.20	25.21	-0.150%	Fitting	Fitting	17+13.00	17+13.00	9.33	24 inch HP Storm
Cal-63	25.30	25.32	-0.150%	Junction Box	Fitting	17+48.00	17+48.00	11.28	24 inch HP Storm
Cal-64	26.47	26.48	-0.170%	Fitting	Fitting	17+13.00	17+13.00	5.01	24 inch HP Storm
Cal-65	26.47	26.48	-0.150%	Junction Box	Fitting	17+48.00	17+48.00	8.24	24 inch HP Storm
Cal-66	25.32	25.33	-0.150%	Fitting	Fitting	20+41.00	20+41.00	7.61	24 inch HP Storm
Cal-67	25.32	25.33	-0.150%	Junction Box	Fitting	20+43.00	20+43.00	8.73	24 inch HP Storm
Cal-68	25.35	25.36	-0.150%	Fitting	Fitting	20+78.00	20+78.00	6.48	24 inch HP Storm
Cal-69	25.50	25.53	-0.150%	Fitting	Fitting	23+83.00	23+83.00	17.13	24 inch HP Storm
Cal-70	25.50	25.51	-0.150%	Junction Box	Fitting	23+77.00	23+77.00	8.06	24 inch HP Storm
Cal-71	25.60	25.61	-0.150%	Fitting	Fitting	23+41.00	23+41.00	6.61	24 inch HP Storm

NO.	DATE	DRN	REVISION	APPROV.
6				
5				
4				
3				
2				
1		HEC		

STATE OF TEXAS
WALLACE R. WILSON
84857
LICENSED
PROFESSIONAL ENGINEER

Summary of Quantities
MCLEAN RELIEF PROJECT

Wallace R. Wilson P.E.

DATE 10-03-22

DRAINAGE DISTRICT NO. 6 JEFFERSON COUNTY, TEXAS DD6

PROJECT LOCATION		
CITY	COUNTY	STATE
BEAUMONT	JEFFERSON	TEXAS
WATERSHED	DITCH NO.	SHEET
WILLOW MARSH	202-E1E	05C

Continued from previous page

Pipe Name	Start Invert	End Invert	Slope	Start Structure	End Structure	Start Station	End Station	Length(Ft)	Size
Cal-72	25.34	25.35	-0.030%	Conc. Channel	Conc. Channel	21+09	21+25	16.00	42 inch HP Storm
Cal-73	25.34	25.35	-0.030%	Conc. Channel	Conc. Channel	21+09	21+25	16.00	42 inch HP Storm
Gdr-01	25.35	25.39	-0.150%	Junction Box	Earthen Channel	0+48.03	0+83.00	34.97	24 inch HP Storm
Gdr-03	25.36	25.39	-0.150%	Fitting	Earthen Channel	0+23.38	0+00.00	23.38	24 inch HP Storm
Gdr-04	25.33	25.36	-0.150%	Fitting	Earthen Channel	0+23.81	0+00.00	23.81	24 inch HP Storm
Gdr-06	25.33	25.35	-0.150%	Fitting	SI	0+58.38	0+70.70	12.32	24 inch HP Storm
Gdr-08	25.32	25.61	-0.150%	Fitting	SI	0+50.74	2+43.48	192.74	24 inch HP Storm
Gdr-09	25.61	25.64	-0.150%	SI	SI	2+43.48	2+43.48	18.44	24 inch HP Storm
Gdr-10	25.61	25.97	-0.150%	SI	SI	2+43.48	4+77.76	234.28	24 inch HP Storm
Gdr-11	25.97	25.99	-0.150%	SI	SI	4+77.76	4+77.79	17.09	24 inch HP Storm
Gdr-12	25.97	25.99	-0.150%	SI	Earthen Channel	4+77.76	4+77.80	16.80	24 inch HP Storm
Jse-01	25.53	25.56	-0.150%	Fitting	Earthen Channel	1+13.28	01+40.00	26.72	24 inch HP Storm
Jse-04	25.51	25.56	-0.150%	Fitting	Earthen Channel	0+77.77	0+43.00	34.77	24 inch HP Storm
Jse-05	25.61	25.64	-0.150%	Fitting	Earthen Channel	0+71.08	0+45.00	26.08	24 inch HP Storm
Jse-08	25.43	25.77	-0.150%	Junction Box	SI	0+94.04	3+25.04	230.96	24 inch HP Storm
Jse-09	25.77	25.80	-0.150%	SI	SI	3+25.04	3+24.61	20.04	24 inch HP Storm
Jse-10	25.77	25.79	-0.150%	SI	Earthen Channel	3+25.04	3+25.14	15.16	24 inch HP Storm
Mcl-01	24.98	26.00	-15.400%	Fitting	SI	0+13.38	0+20.00	6.70	24 inch HP Storm
Mcl-02	26.00	26.22	-0.150%	SI	SI	0+20.00	1+63.66	143.66	24 inch HP Storm
Mcl-03	26.22	26.24	-0.150%	SI	Earthen Channel	1+63.66	1+63.43	16.25	24 inch HP Storm
Mcl-04	26.22	26.26	-0.150%	SI	SI	1+63.66	1+90.61	26.95	24 inch HP Storm
Mcl-05	26.26	26.28	-0.150%	SI	Earthen Channel	1+90.61	1+90.62	15.72	24 inch HP Storm
Mcl-06	26.26	26.66	-0.150%	SI	SI	1+90.61	4+57.80	267.19	24 inch HP Storm
Mcl-07	26.66	26.68	-0.150%	SI	SI	4+57.80	4+57.82	18.18	24 inch HP Storm
Mcl-08	26.66	26.68	-0.150%	SI	Earthen Channel	4+57.80	4+57.80	16.00	24 inch HP Storm
Mcl-09	25.00	25.00	-0.050%	Fitting	Earthen Channel	0+26.45	0+53.00	22.81	24 inch HP Storm
Phln-01	23.50	23.56	-0.040%	Detention Basin	Earthen Channel	0+09.15	1+77.15	168.00	36 inch Concrete Box Culvert
Phln-02	23.50	23.56	-0.040%	Detention Basin	Earthen Channel	0+09.15	1+77.15	168.00	36 inch Concrete Box Culvert
Phln-03	23.50	23.56	-0.040%	Detention Basin	Earthen Channel	0+09.15	1+77.15	168.00	36 inch Concrete Box Culvert
Phln-04	23.50	23.54	-0.040%	Detention Basin	CI	0+09.15	1+01.40	92.25	36 inch Concrete Box Culvert
Phln-05	23.54	23.55	-0.040%	CI	CI	1+01.40	1+42.58	41.18	36 inch Concrete Box Culvert
Phln-06	23.55	23.56	-0.040%	CI	Earthen Channel	1+42.58	1+77.15	34.58	36 inch Concrete Box Culvert
Shpd-01	25.32	25.37	-0.150%	Fitting	Earthen Channel	0+66.33	01+06.00	39.67	24 inch HP Storm
Shpd-04	26.48	26.51	-0.150%	Fitting	Earthen Channel	0+31.24	0+08.00	23.24	24 inch HP Storm
Shpd-05	26.48	26.51	-0.170%	Fitting	Earthen Channel	0+31.34	0+08.00	23.34	24 inch HP Storm
Shpd-08	25.21	25.24	-0.150%	Fitting	Earthen Channel	0+66.96	0+90.00	23.04	24 inch HP Storm
Shpd-09	25.30	25.60	-0.150%	Fitting	SI	0+57.65	2+58.81	201.16	24 inch HP Storm
Shpd-10	25.60	25.63	-0.150%	SI	SI	2+58.81	2+59.08	17.49	24 inch HP Storm
Shpd-11	25.60	25.63	-0.150%	SI	Earthen Channel	2+58.81	2+58.82	16.31	24 inch HP Storm
Shpd-12	25.60	26.00	-0.150%	SI	SI	2+58.81	5+25.00	266.19	24 inch HP Storm
Shpd-13	26.00	26.03	-0.150%	SI	Earthen Channel	5+25.00	5+25.06	16.21	24 inch HP Storm
Shpd-14	26.00	26.03	-0.150%	SI	Earthen Channel	5+25.00	5+25.01	16.15	24 inch HP Storm

	60"x60"-CB	30"x30"-SI	42"-Pipe	24"-Pipe	42"-Tee	24"-Tee	42"x24"-EccTee	42"-45°	24"-45°
Mclean		5		533.46			2	4	1
Broun		3		606.08	2	4	3		
Shepherd		3		642.80	2	4	3		
Gardner		5		573.84	2	3	3		
Josey		2		353.73	1	3	3		
Calhoun	18	7	4,438	1,219.56					
Total=	18	25	4,438	3,929	7	14	14	4	1

NO.	DATE	DRN	REVISION	APPROV.
6				
5				
4				
3				
2				
1		HEC		

STATE OF TEXAS
WALLACE R. WILSON
84857
LICENSED
PROFESSIONAL ENGINEER

Summary of Quantities
MCLEAN RELIEF PROJECT

Wallace R. Wilson P.E.

DATE 10-03-22

DRAINAGE DISTRICT NO. 6
DD6
JEFFERSON COUNTY, TEXAS

PROJECT LOCATION		
CITY	COUNTY	STATE
BEAUMONT	JEFFERSON	TEXAS
WATERSHED	DITCH NO.	SHEET
WILLOW MARSH	202-E1E	05D

DD6 Inventory

Inventory List			
Water and Sewer Utilities			
Item	**Description**	**Ordered Quantity**	**Unit**
WS-1	6" PVC C900 Class 150 Waterline	1,668	L.F.
WS-2	6" MJ 45-Bend with MegaLugs/Glands/Gaskets/Bolts	29	Ea.
WS-3	6" MJ 90-Bend with MegaLugs/Glands/Gaskets/Bolts	1	Ea.
WS-4	6" MJ Tee with MegaLugs/Glands/Gaskets/Bolts	3	Ea.
WS-5	6" MJ Cross with MegaLugs/Glands/Gaskets/Bolts	3	Ea.
WS-6	6" Hymax Adapter	11	Ea.
WS-7	6" Resilient Wedge Gate Valve & Valve Box with MegaLugs/Glands/Gaskets/Bolts	17	Ea.
WS-8	FireHydrant Assembly	2	Ea.
WS-9	FireHydrant Valves	2	Ea.
WS-10	FireHydrant Tyler Swivel Tee#5-125	2	Ea.
WS-11	FireHydrant Tapping Saddle	2	Ea.
WS-12	4 Mil Poly Plastic Rolls	4	Ea.
WS-13	1" HDPE SDR9 Waterline	1,500	L.F.
WS-14	1" Stiffner	50	Ea.
WS-15	Bronze Service saddle Smith Blair or Approved Equal	50	Ea.
WS-16	Corporation Stop Hayes 5200 or Approved Equal	50	Ea.
WS-17	HDPE Socket male Adapter	50	Ea.
WS-18	Jones Corporation Stop or Approved Equal	50	Ea.
WS-19	Black Meter Boxes *Provided by the City of Beaumont	50	Ea.
WS-20	4" SDR26 Sewerline	50	L.F.
WS-21	8" SDR26 Sewerline	230	L.F.
WS-22	10" SDR26 Sewerline	1,110	L.F.
WS-23	12" SDR26 Sewerline	20	L.F.
WS-24	4" PVC Sch 40 Sewerline Service	100	L.F.
WS-25	4" SDR26 45 Degree Fitting	2	Ea.
WS-26	4" Full Circle Clamp 16" Min. Width	2	Ea.
WS-27	6" Sewer Cap	1	Ea.
WS-28	8" SDR26 Tee (8"x8"x4")	2	Ea.
WS-29	8" Entry Saddle (Fiberglass manhole)	3	Ea.
WS-30	8" Full Circle Clamp 16" Min. Width	3	Ea.
WS-31	Fiberglass Manhole	8	Ea.
WS-32	City of Beaumont Standard Ring and Cover (Sewer)	8	Ea.
WS-33	Stainless Steel Inflow Prevention Device (Sewer)	4	Ea.

Inventory List			
Storm Utilities			
Item	**Description**	**Ordered Quantity**	**Unit**
ST-1	42" HP Storm Pipe (20' Joints)	4,420	L.F.
ST-2	42" HP Storm 45 Degree Fitting	4	Ea.
ST-3	42" HP Storm Tee Fitting	7	Ea.
ST-4	42" x 24" HP Storm Tee Eccentric Fitting	14	Ea.
ST-5	24" HP Storm Pipe (20' Joints)	3,740	L.F.
ST-6	24" HP Storm 45 Degree Fitting	1	Ea.
ST-7	24" HP Storm Tee Fitting	14	Ea.
ST-8	24" HP Storm Pipe (20' Joints to be cut for S.E.T.)	360	L.F.
ST-9	Catch Basin 60"x60"x66" (Bottom/72"x72") (Rock Solid Precast Part No. CB606066) or Approved Equal	18	Ea.
ST-10	6" Slab Top (60"x60" Catch Basin)	18	Ea.
ST-11	Cast Iron Grate (60"x60" Catch Basin)	18	Ea.
ST-12	Catch Basin 30"x30"x48" (Bottom/42"x42") (Rock Solid Precast Part No. CB303048) or Approved Equal	23	Ea.
ST-13	6" Riser (30"x30" Catch Basin)	23	Ea.
ST-14	6" Slab Top (30"x30" Catch Basin)	23	Ea.
ST-15	Cast Iron Grate (30"x30" Catch Basin)	23	Ea.

NO.	DATE	DRN	REVISION	APPROV.
6				
5				
4				
3				
2				
1		HEC		

STATE OF TEXAS
WALLACE R. WILSON
84857
LICENSED
PROFESSIONAL ENGINEER

Summary of Quantities
MCLEAN RELIEF PROJECT

Wallace R. Wilson P.E.

DATE 10-03-22

DRAINAGE DISTRICT NO. 6 JEFFERSON COUNTY, TEXAS

PROJECT LOCATION		
CITY	COUNTY	STATE
BEAUMONT	JEFFERSON	TEXAS
WATERSHED	DITCH NO.	SHEET
WILLOW MARSH	202-E1E	05E

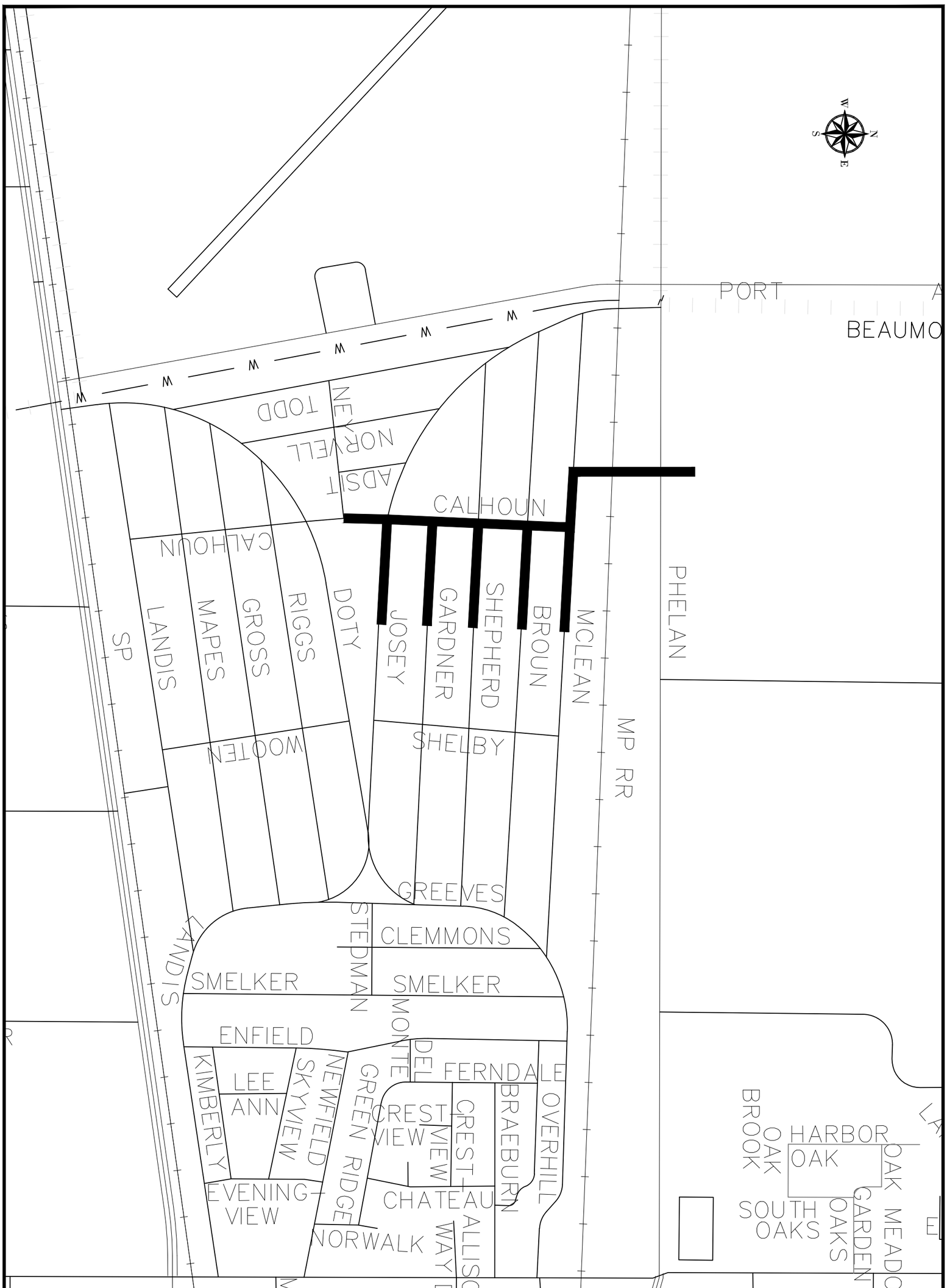

NO.	DATE	DRN	REVISION	APPROV.
6				
5				
4				
3				
2				
1		HEC		

STATE OF TEXAS
WALLACE R. WILSON
84857
LICENSED
PROFESSIONAL ENGINEER

Mclean Relief Project

Project Layout

Wallace R. Wilson P.E.

DATE
10-03-22

DRAINAGE DISTRICT NO. 6
JEFFERSON COUNTY, TEXAS
DD6

PROJECT LOCATION

CITY	COUNTY	STATE
BEAUMONT	JEFFERSON	TEXAS
WATERSHED	DITCH NO.	SHEET
WILLOW MARSH	202-E1E	06

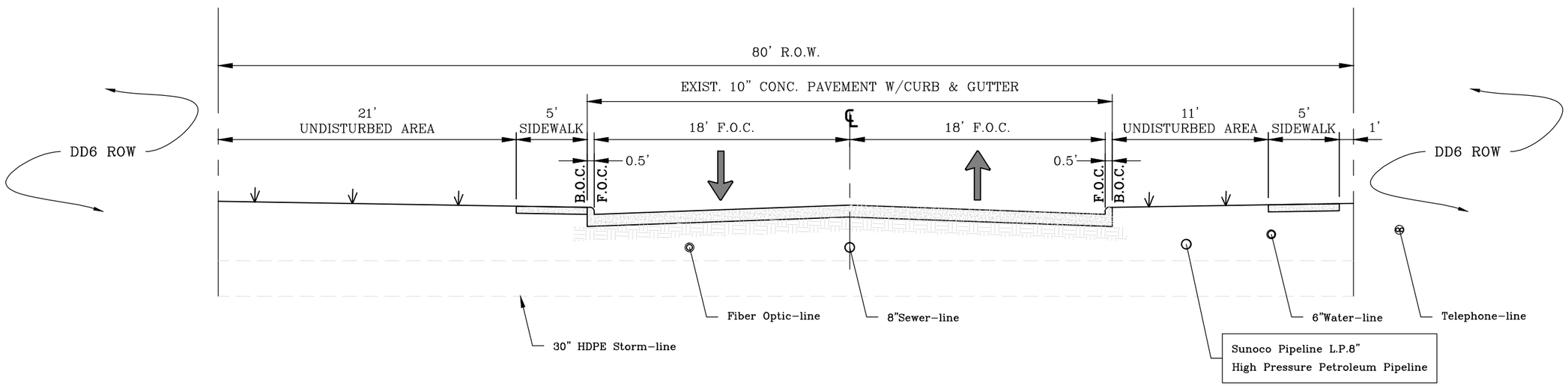

EXIST. PHELAN BLVD. SECTION-CONCRETE
ROAD CLASSIFICATION-ARTERIAL
NTS

Note:
1. No Existing Striping
2. Phelan Blvd. to be done by others

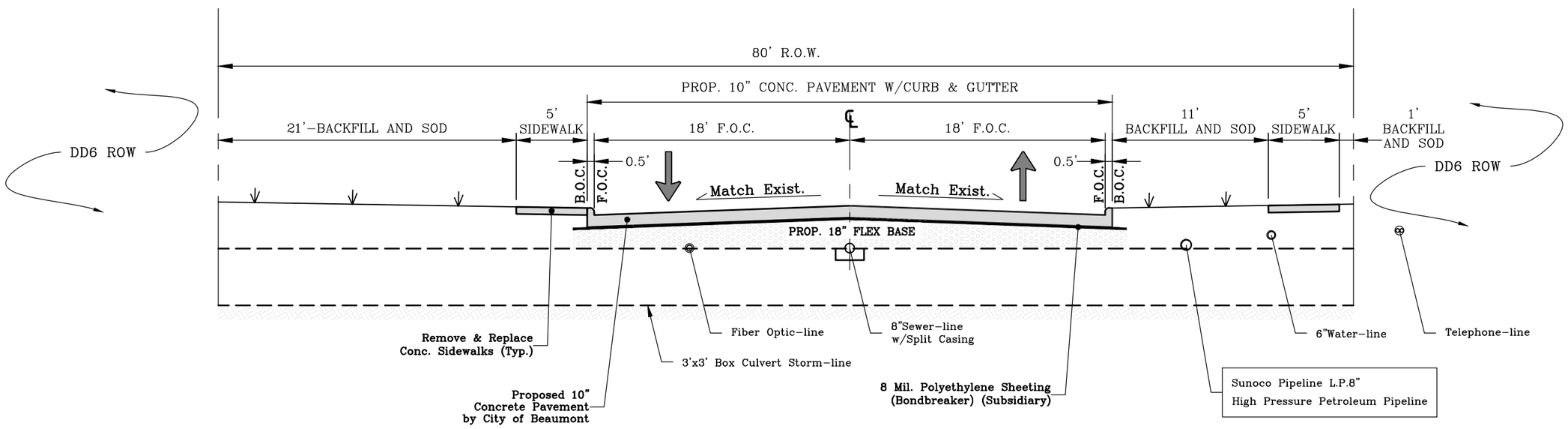

PROP. PHELAN BLVD. SECTION-CONCRETE
ROAD CLASSIFICATION-ARTERIAL
NTS

Pavement Note:
1. Class P Concrete
2. Finish-Medium Tine

Curb & Gutter Note:
1. Class A Concrete
2. Finish-Broom

PROJECT LOCATION

CITY	COUNTY	STATE
BEAUMONT	JEFFERSON	TEXAS
WATERSHED	DITCH NO.	SHEET
200	202-E1E	07A

DRAINAGE DISTRICT NO. 6 JEFFERSON COUNTY, TEXAS

Mclean Relief Project
Phelan Blvd. Concrete Section

WALLACE R. WILSON. P.E. No.84857

DATE 10-03-22

STATE OF TEXAS
WALLACE R. WILSON
84857
LICENSED PROFESSIONAL ENGINEER

NO.	DATE	DRN	REVISION	APPROV.
6				
5				
4				
3				
2				
1				

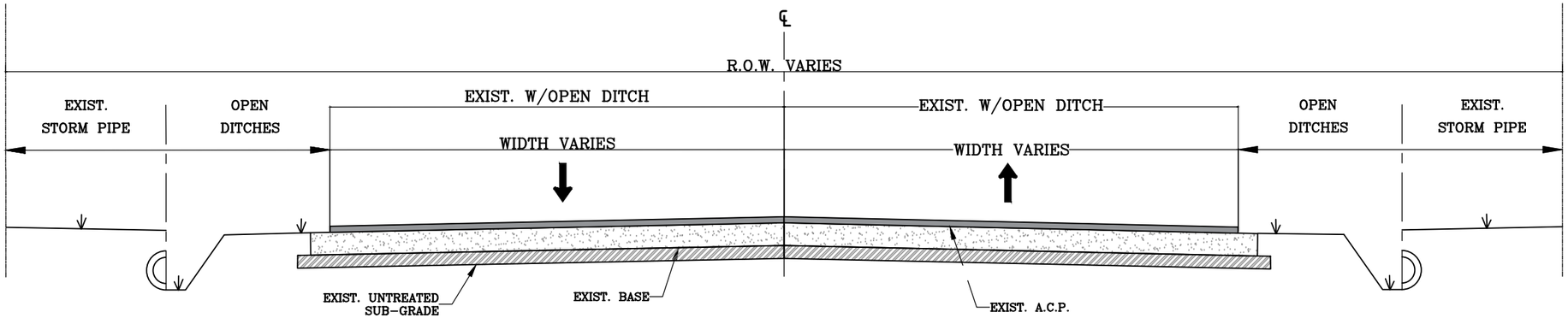

EXISTING TYPICAL SECTION
ROAD CLASSIFICATION–LOCAL
NTS

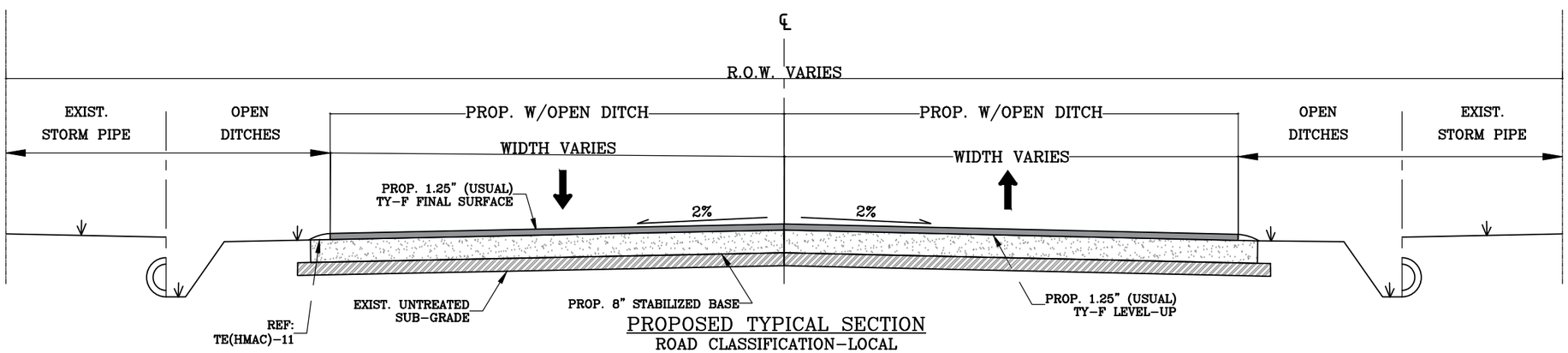

PROPOSED TYPICAL SECTION
ROAD CLASSIFICATION–LOCAL
NTS

*NOTE:

1. The following roads are to be constructed at 18–FT Wide: MCLEAN, SHEPHERD, & GARDNER
2. The following roads are to be constructed at 19–FT Wide: BROUN & JOSEY
3. The base of the road is to be constructed 1–FT beyond the specified road edge.
4. No existing striping.

PROJECT LOCATION

CITY	COUNTY	STATE
BEAUMONT	JEFFERSON	TEXAS
WATERSHED	DITCH NO.	SHEET
200	202–E1E	07B

DRAINAGE DISTRICT NO. 6 JEFFERSON COUNTY, TEXAS

Mclean Relief Project
Asphalt Roadway Typical Section

WALLACE R. WILSON. P.E. No.84857

DATE 10–03–22

STATE OF TEXAS
WALLACE R. WILSON
84857
LICENSED PROFESSIONAL ENGINEER

NO.	DATE	DRN	REVISION	APPROV.
6				
5				
4				
3				
2				
1				

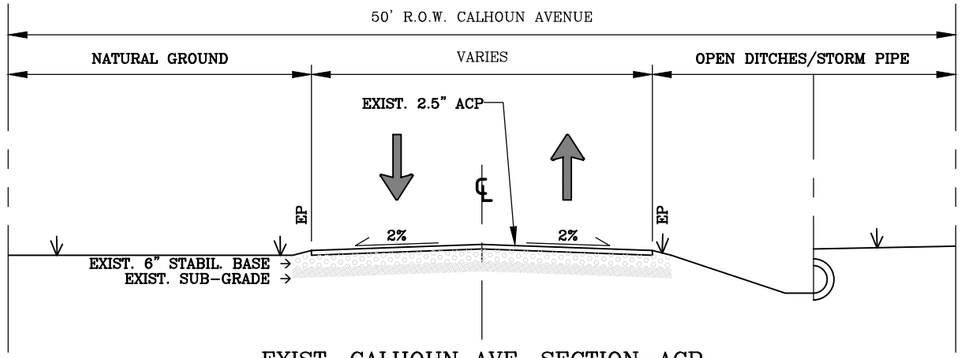

EXIST. CALHOUN AVE. SECTION–ACP
ROAD CLASSIFICATION–LOCAL
NTS

*NOTE:

1. REFER TO ASPHALT ROADWAY TYPICAL SECTION DETAIL FOR THE CONSTRUCTION OF THE ASPHALT PAVEMENT

ITEM 310–Prime Coat with Blotter:

1. Type AE and Grade P with Blotter
2. Application Rate = 0.20 Gallons/S.Y.

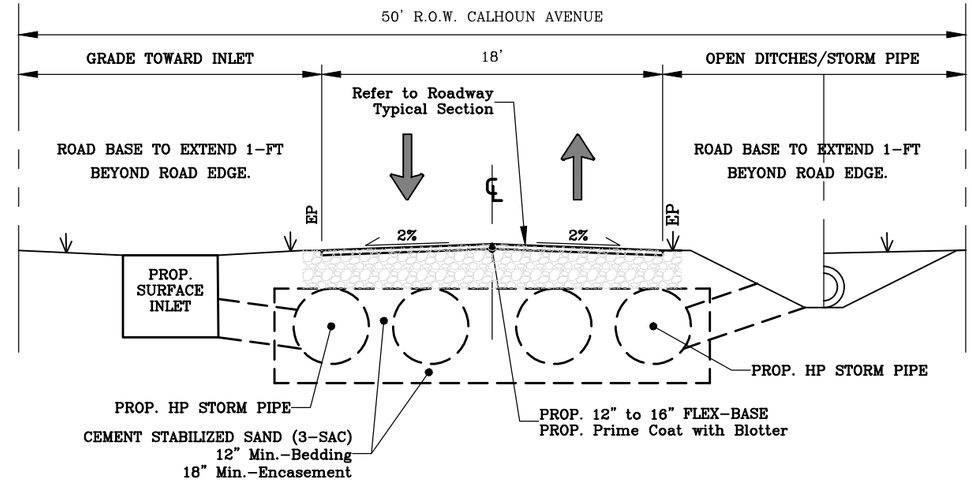

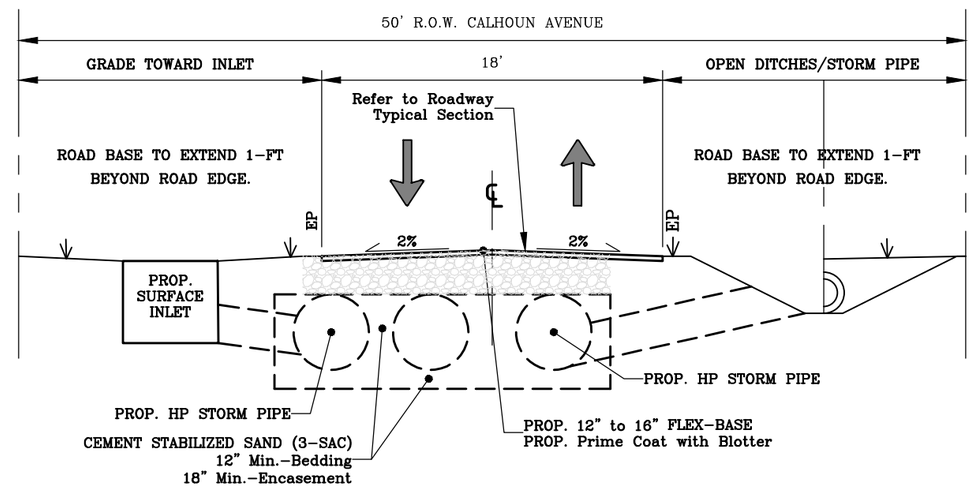

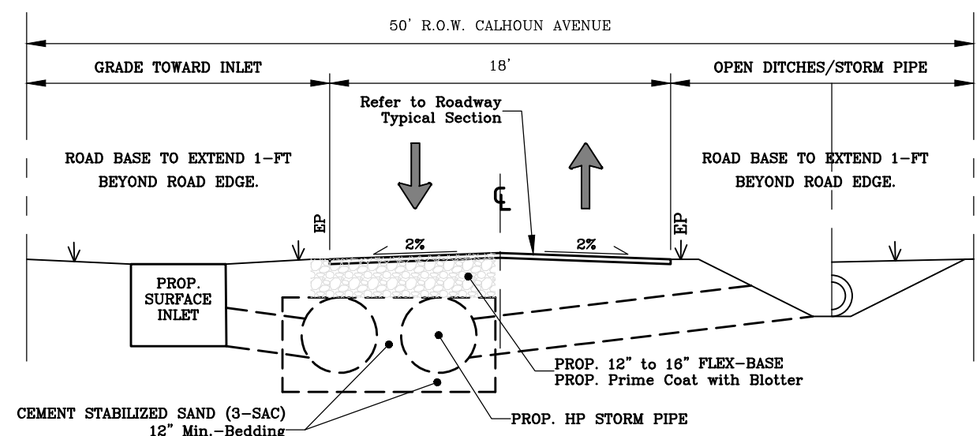

PROP. CALHOUN AVE. SECTION–HMAC
ROAD CLASSIFICATION–LOCAL
NTS

PROJECT LOCATION

CITY	COUNTY	STATE
BEAUMONT	JEFFERSON	TEXAS
WATERSHED	DITCH NO.	SHEET
200	202–E1E	07C

DRAINAGE DISTRICT NO. 6 JEFFERSON COUNTY, TEXAS

Mclean Relief Project
Calhoun Ave. HMAC Section

WALLACE R. WILSON. P.E. No.84857

Wallace R. Wilson P.E.

DATE 10–03–22

STATE OF TEXAS WALLACE R. WILSON 84857 LICENSED PROFESSIONAL ENGINEER

NO.	DATE	DRN	REVISION	APPROV.
6				
5				
4				
3				
2				
1				

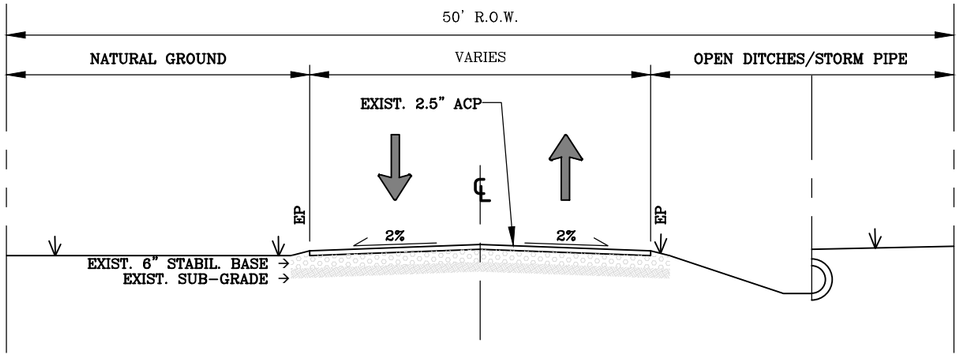

EXIST. TYPICAL SECTION–ACP for:
MCLEAN ST., BROUN ST., SHEPHERD ST., GARDNER ST. & JOSEY ST.
ROAD CLASSIFICATION–LOCAL
NTS

*NOTE:

1. REFER TO ASPHALT ROADWAY TYPICAL SECTION DETAIL FOR THE CONSTRUCTION OF THE ASPHALT PAVEMENT

ITEM 310–Prime Coat with Blotter:

1. Type AE and Grade P with Blotter
2. Application Rate = 0.20 Gallons/S.Y.

*NOTE:

1. The following roads are to be constructed at 18–FT Wide: MCLEAN, SHEPHERD, & GARDNER
2. The following roads are to be constructed at 19–FT Wide: BROUN & JOSEY
3. The base of the road is to be constructed 1–FT beyond the specified road edge.

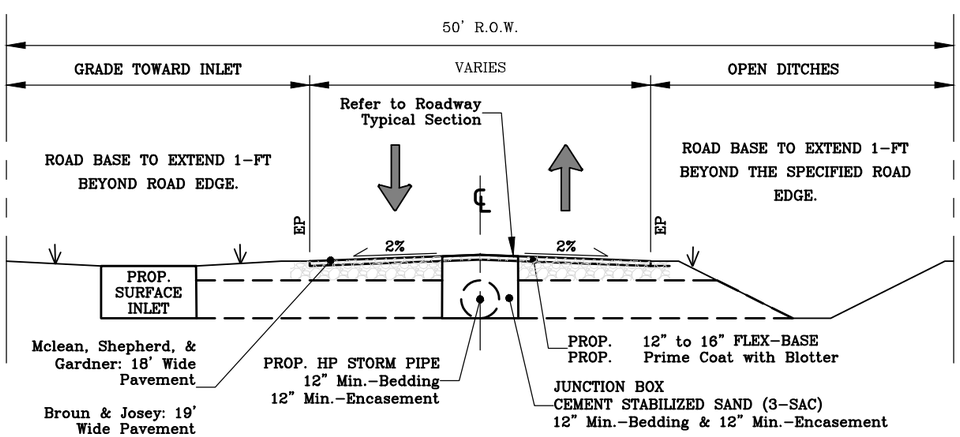

PROP. TYPICAL SECTION–ACP for LATERAL PIPES:
MCLEAN ST., BROUN ST., SHEPHERD ST., GARDNER ST. & JOSEY ST.
ROAD CLASSIFICATION–LOCAL
NTS

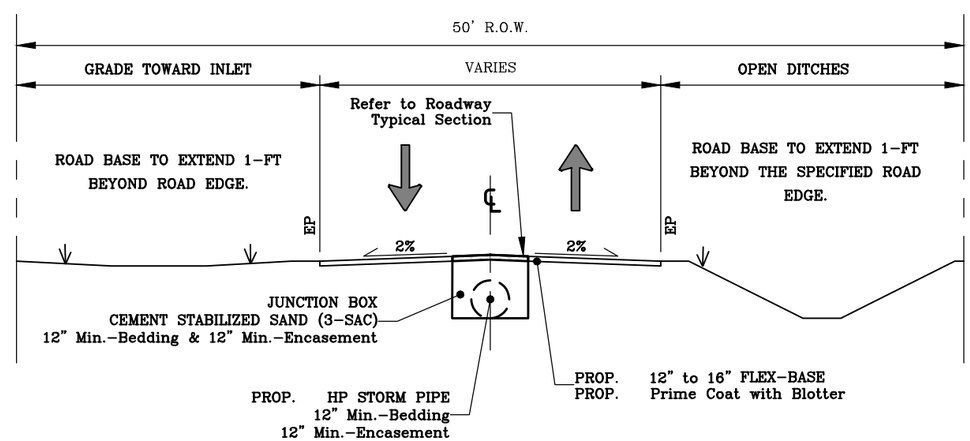

PROP. TYPICAL SECTION–ACP for LONGITUDINAL PIPES:
MCLEAN ST., BROUN ST., SHEPHERD ST., GARDNER ST. & JOSEY ST.
ROAD CLASSIFICATION–LOCAL
NTS

PROJECT LOCATION

CITY	COUNTY	STATE
BEAUMONT	JEFFERSON	TEXAS
WATERSHED	DITCH NO.	SHEET
200	202–E1E	07D

Mclean Relief Project
TYPICAL SECTION – HMAC

WALLACE R. WILSON. P.E. No.84857
DATE 10–03–22

NO.	DATE	DRN	REVISION	APPROV.
6				
5				
4				
3				
2				
1				

DISCLAIMER:
The use of this standard is governed by the "Texas Engineering Practice Act". No warranty of any kind is made by TxDOT for any purpose whatsoever. TxDOT assumes no responsibility for the conversion of this standard to other formats or for incorrect results or damages resulting from its use.

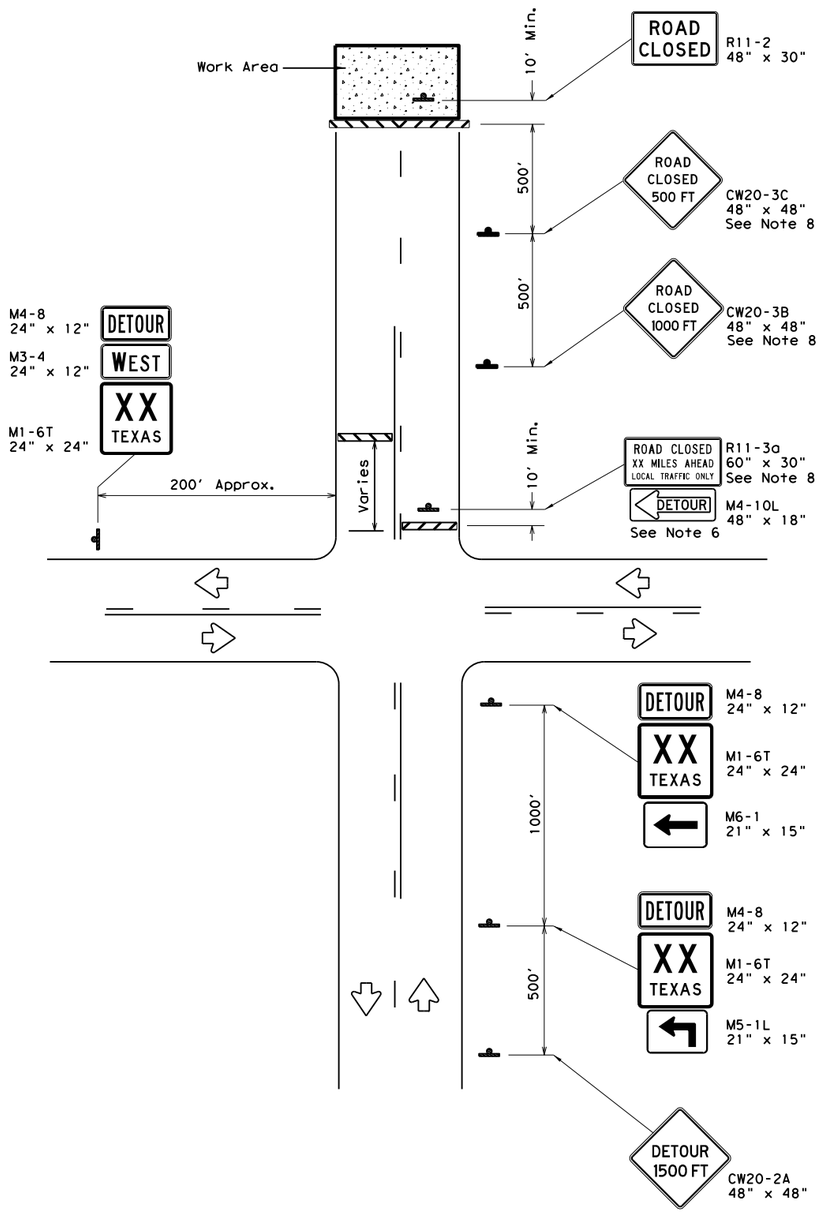

ROAD CLOSURE BEYOND THE INTERSECTION

Signing for a Numbered Route with an Off-Site Detour

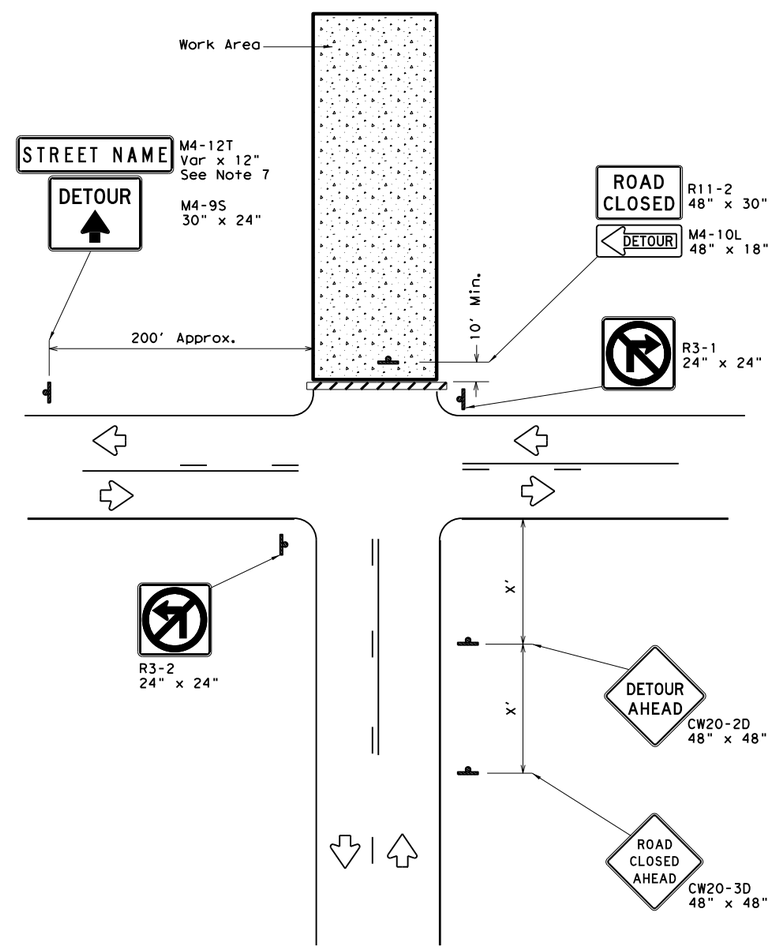

ROAD CLOSURE AT THE INTERSECTION

Signing for an Un-numbered Route with an Off-Site Detour

LEGEND	
	Type 3 Barricade
	Sign

Posted Speed *	Minimum Sign Spacing "X" Distance
30	120'
35	160'
40	240'
45	320'
50	400'
55	500'
60	600'
65	700'
70	800'
75	900'

* Conventional Roads Only

GENERAL NOTES

1. This sheet is intended to provide details for temporary work zone road closures. For permanent road closure details see the D&OM standards.
2. Barricades used shall meet the requirements shown on Barricade and Construction Standard BC(10) and listed on the Compliant Work Zone Traffic Control Devices list (CWZTCD).
3. Stockpiled materials shall not be placed on the traffic side of barricades.
4. Barricades at the road closure should extend from pavement edge to pavement edge.
5. Detour signing shown is intended to illustrate the type of signing that is appropriate for numbered routes or un-numbered routes as labeled. It does not indicate the full extent of detour signing required. Detour routes should be signed as shown elsewhere in the plans.
6. If the road is open for a significant distance beyond the intersection or there are significant origin/destination points beyond the intersection, the signs and barricades at this location should be located at the edge of the traveled way.
7. The Street Name (M4-12T) sign is to be placed above the DETOUR (M4-9S) sign.
8. For urban areas where there is a shorter distance between the intersection and the actual closure location, the ROAD CLOSED XX MILES AHEAD (R11-3a) sign may be replaced with a ROAD CLOSED TO THRU TRAFFIC (R11-4) sign. If adequate space does not exist between the intersection and the closure a single ROAD CLOSED AHEAD (CW20-3D) sign spaced as per the table above may replace the ROAD CLOSED 1000 FT (CW20-3B) and ROAD CLOSED 500 FT (CW20-3C) signs.
9. Signs and barricades shown shall be subsidiary to Item 502. Locations where these details will be required shall be as shown elsewhere in the plans.

Texas Department of Transportation

Traffic Operations Division Standard

WORK ZONE ROAD CLOSURE DETAILS

WZ(RCD)-13

FILE: wzrcd-13.dgn	DN: TxDOT	CK: TxDOT	DW: TxDOT	CK: TxDOT
© TxDOT August 1995	CONT	SECT	JOB	HIGHWAY
REVISIONS				
1-97 4-98 7-13	DIST	COUNTY		SHEET NO.
2-98 3-03				

DATE:
FILE:

DISCLAIMER:
The use of this standard is governed by the "Texas Engineering Practice Act". No warranty of any kind is made by TxDOT for any purpose whatsoever. TxDOT assumes no responsibility for the conversion of this standard to other formats or for incorrect results or damages resulting from its use.

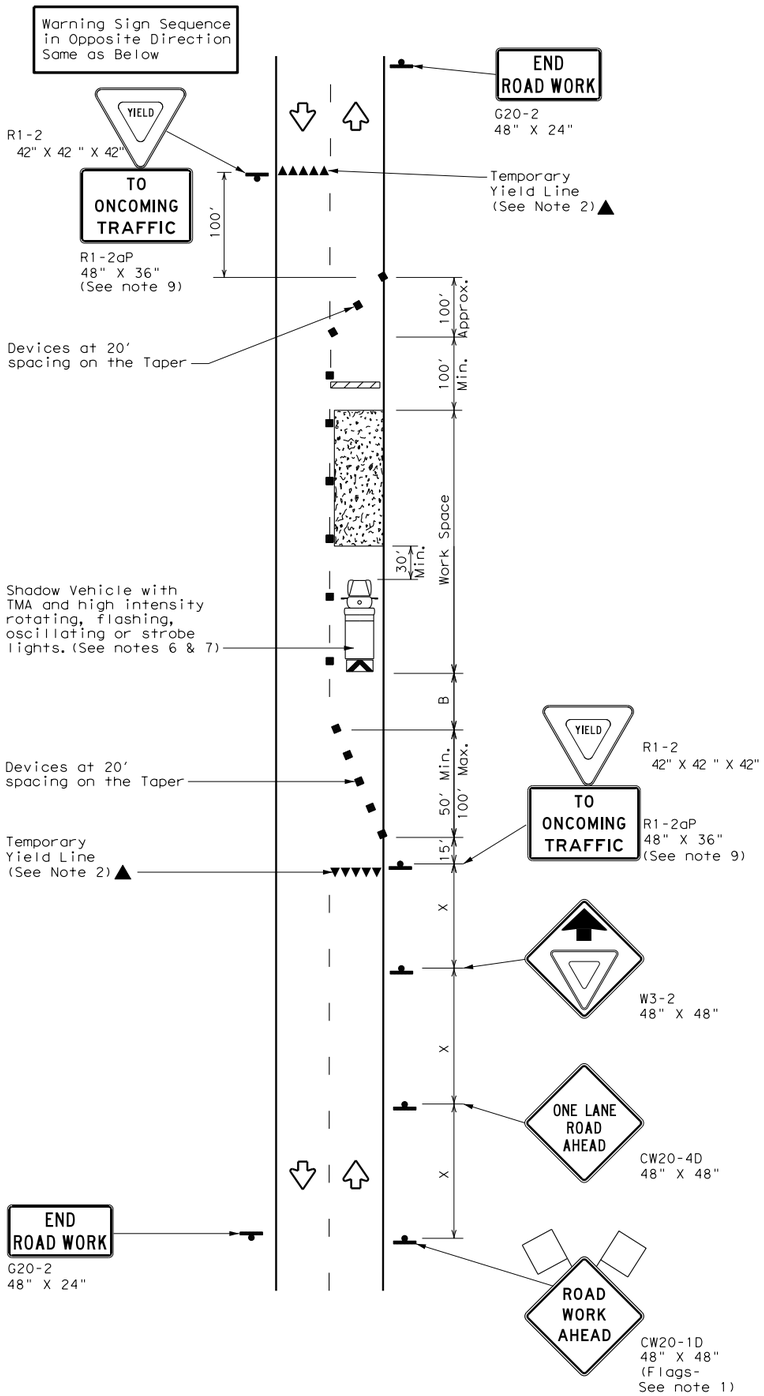

TCP (2-2a)

2-LANE ROADWAY WITHOUT PAVED SHOULDERS

ONE LANE TWO-WAY CONTROL WITH YIELD SIGNS

(Less than 2000 ADT - See Note 9)

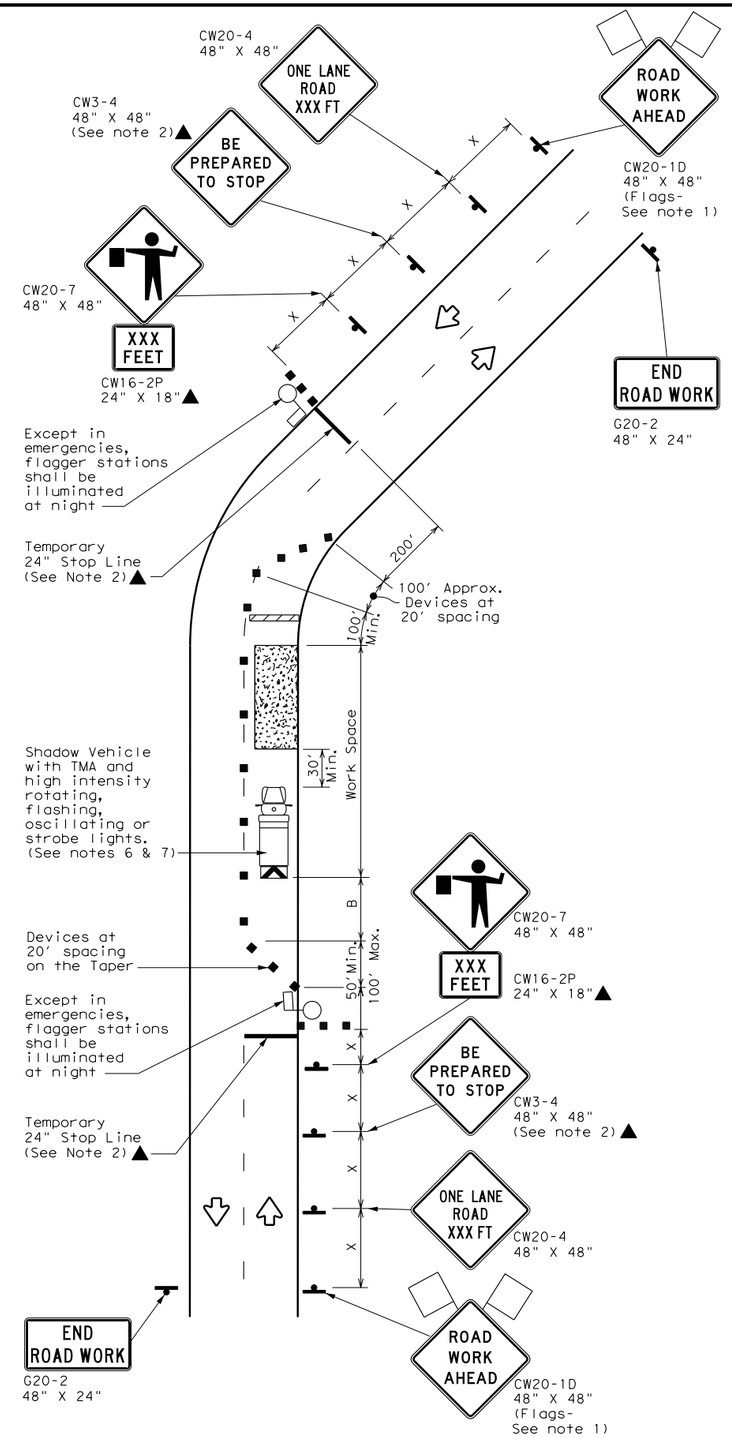

TCP (2-2b)

2-LANE ROADWAY WITHOUT PAVED SHOULDERS

ONE LANE TWO-WAY CONTROL WITH FLAGGERS

LEGEND

	Type 3 Barricade		Channelizing Devices
	Heavy Work Vehicle		Truck Mounted Attenuator (TMA)
	Trailer Mounted Flashing Arrow Board	M	Portable Changeable Message Sign (PCMS)
	Sign		Traffic Flow
	Flag		Flagger

Posted Speed ✱	Formula	Minimum Desirable Taper Lengths ✱✱ 10' Offset	11' Offset	12' Offset	Suggested Maximum Spacing of Channelizing Devices On a Taper	On a Tangent	Minimum Sign Spacing "X" Distance	Suggested Longitudinal Buffer Space "B"	Stopping Sight Distance
30	$L = \frac{WS^2}{60}$	150'	165'	180'	30'	60'	120'	90'	200'
35		205'	225'	245'	35'	70'	160'	120'	250'
40		265'	295'	320'	40'	80'	240'	155'	305'
45	L = WS	450'	495'	540'	45'	90'	320'	195'	360'
50		500'	550'	600'	50'	100'	400'	240'	425'
55		550'	605'	660'	55'	110'	500'	295'	495'
60		600'	660'	720'	60'	120'	600'	350'	570'
65		650'	715'	780'	65'	130'	700'	410'	645'
70		700'	770'	840'	70'	140'	800'	475'	730'
75		750'	825'	900'	75'	150'	900'	540'	820'

✱ Conventional Roads Only

✱✱ Taper lengths have been rounded off.

L=Length of Taper(FT) W=Width of Offset(FT) S=Posted Speed(MPH)

TYPICAL USAGE

MOBILE	SHORT DURATION	SHORT TERM STATIONARY	INTERMEDIATE TERM STATIONARY	LONG TERM STATIONARY
	✓	✓	✓	

GENERAL NOTES

1. Flags attached to signs where shown, are REQUIRED.
2. All traffic control devices illustrated are REQUIRED, except those denoted with the triangle symbol may be omitted when stated elsewhere in the plans, or for routine maintenance work, when approved by the Engineer.
3. The CW3-4 "BE PREPARED TO STOP" sign may be installed after the CW20-4 "ONE LANE ROAD XXX FT" sign, but proper sign spacing shall be maintained.
4. Flaggers should use two-way radios or other methods of communication to control traffic.
5. Length of work space should be based on the ability of flaggers to communicate.
6. A Shadow Vehicle with a TMA should be used anytime it can be positioned 30 to 100 feet in advance of the area of crew exposure without adversely affecting the performance or quality of the work. If workers are no longer present but road or work conditions require the traffic control to remain in place, Type 3 Barricades or other channelizing devices may be substituted for the Shadow Vehicle and TMA.
7. Additional Shadow Vehicles with TMAs may be positioned off the paved surface, next to those shown in order to protect a wider work space.

TCP (2-2a)

8. The R1-2 "YIELD" sign traffic control may be used on projects with approaches that have adequate sight distance. For projects in urban areas, work space should be no longer than one half city block. In rural areas, roadways with less than 2000 ADT, work space should be no longer than 400 feet.
9. The R1-2aP "YIELD TO ONCOMING TRAFFIC" sign shall be placed on a support at a 7 foot minimum mounting height.

TCP (2-2b)

10. Channelizing devices on the center line may be omitted when a pilot car is leading traffic and approved by the Engineer.
11. If the work space is located near a horizontal or vertical curve, the buffer distances should be increased in order to maintain stopping sight distance to the flagger and a queue of stopped vehicles. (See table above).
12. Flaggers should use 24" STOP/SLOW paddles to control traffic. Flags should be limited to emergency situtations.

Texas Department of Transportation — Traffic Operations Division Standard

TRAFFIC CONTROL PLAN ONE-LANE TWO-WAY TRAFFIC CONTROL

TCP(2-2)-18

FILE: tcp2-2-18.dgn	DN:	CK:	DW:	CK:
©TxDOT December 1985	CONT	SECT	JOB	HIGHWAY
REVISIONS 8-95 3-03, 1-97 2-12, 4-98 2-18	DIST		COUNTY	SHEET NO.

DATE:
FILE:

DISCLAIMER:
The use of this standard is governed by the "Texas Engineering Practice Act". No warranty of any kind is made by TxDOT for any purpose whatsoever. TxDOT assumes no responsibility for the conversion of this standard to other formats or for incorrect results or damages resulting from its use.

BARRICADE AND CONSTRUCTION (BC) STANDARD SHEETS GENERAL NOTES:

1. The Barricade and Construction Standard Sheets (BC sheets) are intended to show typical examples for placement of temporary traffic control devices, construction pavement markings, and typical work zone signs. The information contained in these sheets meet or exceed the requirements shown in the "Texas Manual on Uniform Traffic Control Devices" (TMUTCD).

2. The development and design of the Traffic Control Plan (TCP)is the responsibility of the Engineer.

3. The Contractor may propose changes to the TCP that are signed and sealed by a licensed professional engineer for approval. The Engineer may develop, sign and seal Contractor proposed changes.

4. The Contractor is responsible for installing and maintaining the traffic control devices as shown in the plans. The Contractor may not move or change the approximate location of any device without the approval of the Engineer.

5. Geometric design of lane shifts and detours should, when possible, meet the applicable design criteria contained in manuals such as the American Association of State Highway and Transportation Officials (AASHTO), "A Policy on Geometric Design of Highways and Streets," the TxDOT "Roadway Design Manual" or engineering judgment.

6. When projects abut, the Engineer(s) may omit the END ROAD WORK, TRAFFIC FINES DOUBLE, and other advance warning signs if the signing would be redundant and the work areas appear continuous to the motorists. If the adjacent project is completed first, the Contractor shall erect the necessary warning signs as shown on these sheets, the TCP sheets or as directed by the Engineer. The BEGIN ROAD WORK NEXT X MILES sign shall be revised to show appropriate work zone distance.

7. The Engineer may require duplicate warning signs on the median side of divided highways where median width will permit and traffic volumes justify the signing.

8. All signs shall be constructed in accordance with the details found in the "Standard Highway Sign Designs for Texas," latest edition. Sign details not shown in this manual shall be shown in the plans or the Engineer shall provide a detail to the Contractor before the sign is manufactured.

9. The temporary traffic control devices shown in the illustrations of the BC sheets are examples. As necessary, the Engineer will determine the most appropriate traffic control devices to be used.

10. Where highway construction or maintenance work is being undertaken, other than mobile operations as defined by the Texas Manual on Uniform Traffic Control Devices, CSJ limit signs are required. CSJ limit signs are shown on BC(2). The OBEY WARNING SIGNS STATE LAW sign, STAY ALERT TALK OR TEXT LATER and the WORK ZONE TRAFFIC FINES DOUBLE sign with plaque shall be erected in advance of the CSJ limits. The BEGIN ROAD WORK NEXT X MILES, CONTRACTOR and END ROAD WORK signs shall be erected at or near the CSJ limits. For mobile operations, CSJ limit signs are not required.

11. Traffic control devices should be in place only while work is actually in progress or a definite need exists.

12. The Engineer has the final decision on the location of all traffic control devices.

13. Inactive equipment and work vehicles, including workers' private vehicles must be parked away from travel lanes. They should be as close to the right-of-way line as possible, or located behind a barrier or guardrail, or as approved by the Engineer.

WORKER SAFETY NOTES:

1. Workers on foot who are exposed to traffic or to construction equipment within the right-of-way shall wear high-visibility safety apparel meeting the requirements of ISEA "American National Standard for High-Visibility Apparel," or equivalent revisions, and labeled as ANSI 107-2004 standard performance for Class 2 or 3 risk exposure. Class 3 garments should be considered for high traffic volume work areas or night time work.

2. Except in emergency situations, flagger stations shall be illuminated when flagging is used at night.

COMPLIANT WORKZONE TRAFFIC CONTROL DEVICES

1. Only pre-qualified products shall be used. The "Compliant Work Zone Traffic Control Devices List" (CWZTCD) describes pre-qualified products and their sources.

2. Work zone traffic control devices shall be compliant with the Manual for Assessing safety Hardware (MASH).

THE DOCUMENTS BELOW CAN BE FOUND ON-LINE AT http://www.txdot.gov
COMPLIANT WORK ZONE TRAFFIC CONTROL DEVICES LIST (CWZTCD)
DEPARTMENTAL MATERIAL SPECIFICATIONS (DMS)
MATERIAL PRODUCER LIST (MPL)
ROADWAY DESIGN MANUAL - SEE "MANUALS (ONLINE MANUALS)"
STANDARD HIGHWAY SIGN DESIGNS FOR TEXAS (SHSD)
TEXAS MANUAL ON UNIFORM TRAFFIC CONTROL DEVICES (TMUTCD)
TRAFFIC ENGINEERING STANDARD SHEETS

Texas Department of Transportation

Traffic Safety Division Standard

BARRICADE AND CONSTRUCTION GENERAL NOTES AND REQUIREMENTS

BC(1)-21

FILE: bc-21.dgn	DN: TxDOT	CK: TxDOT	DW: TxDOT	CK: TxDOT
© TxDOT November 2002	CONT	SECT	JOB	HIGHWAY
REVISIONS 4-03 7-13 9-07 8-14 5-10 5-21	DIST	COUNTY		SHEET NO.

DATE:
FILE:

TYPICAL LOCATION OF CROSSROAD SIGNS

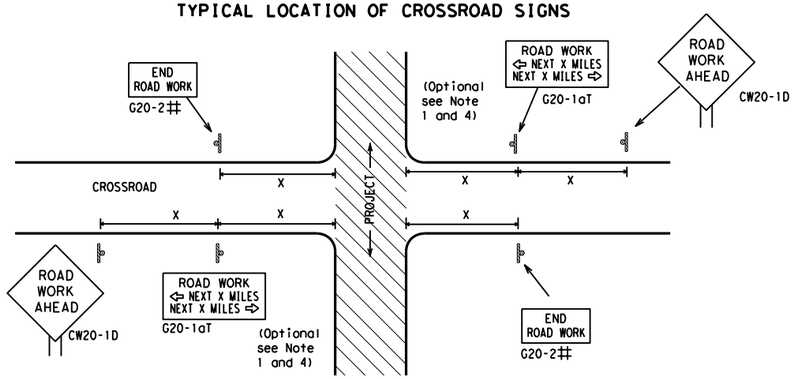

May be mounted on back of "ROAD WORK AHEAD"(CW20-1D) sign with approval of Engineer. (See note 2 below)

1. The typical minimum signing on a crossroad approach should be a "ROAD WORK AHEAD" (CW20-1D)sign and a (G20-2) "END ROAD WORK" sign, unless noted otherwise in plans.
2. The Engineer may use the reduced size 36" x 36" ROAD WORK AHEAD (CW20-1D) sign mounted back to back with the reduced size 36" x 18" "END ROAD WORK"(G20-2) sign on low volume crossroads (see Note 4 under "Typical Construction Warning Sign Size and Spacing"). See the "Standard Highway Sign Designs for Texas" manual for sign details. The Engineer may omit the advance warning signs on low volume crossroads. The Engineer will determine whether a road is low volume as per TMUTCD Part 5. This information shall be shown in the plans.
3. Based on existing field conditions, the Engineer/Inspector may require additional signs such as FLAGGER AHEAD, LOOSE GRAVEL, or other appropriate signs. When additional signs are required, these signs will be considered part of the minimum requirements. The Engineer/Inspector will determine the proper location and spacing of any sign not shown on the BC sheets, Traffic Control Plan sheets or the Work Zone Standard Sheets.
4. The "ROAD WORK NEXT X MILES"(G20-1aT)sign shall be required at high volume crossroads to advise motorists of the length of construction in either direction from the intersection. The Engineer will determine whether a roadway is considered high volume.
5. Additional traffic control devices may be shown elsewhere in the plans for higher volume crossroads.
6. When work occurs in the intersection area, appropriate traffic control devices, as shown elsewhere in the plans or as determined by the Engineer/Inspector, shall be in place.

T-INTERSECTION

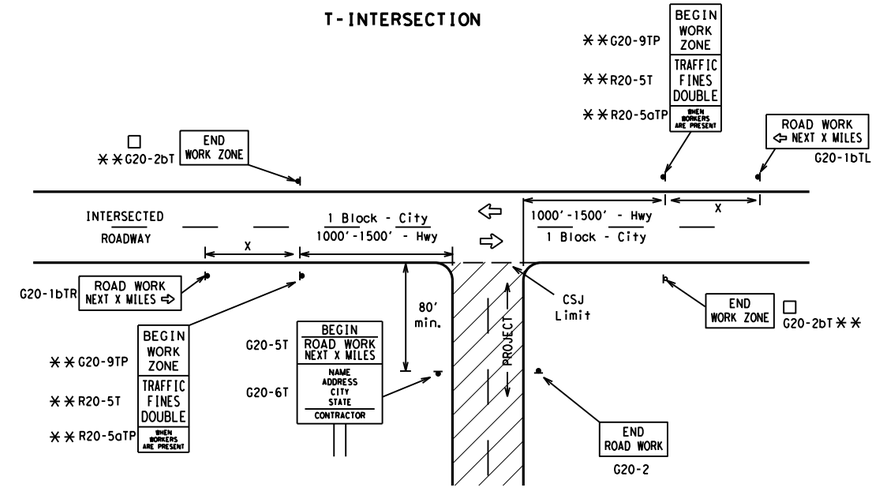

CSJ LIMITS AT T-INTERSECTION

1. The Engineer will determine the types and location of any additional traffic control devices, such as a flagger and accompanying signs, or other signs, that should be used when work is being performed at or near an intersection.
2. If construction closes the road at a T-intersection, the Contractor shall place the "CONTRACTOR NAME"(G20-6T) sign behind the Type 3 Barricades for the road closure (see BC(10) also). The "ROAD WORK NEXT X MILES" left arrow(G20-1bTL) and "ROAD WORK NEXT X MILES" right arrow (G20-1bTR)" signs shall be replaced by the detour signing called for in the plans.

TYPICAL CONSTRUCTION WARNING SIGN SIZE AND SPACING[1,5,6]

SIZE

Sign Number or Series	Conventional Road	Expressway/ Freeway
CW20[4] CW21 CW22 CW23 CW25	48" x 48"	48" x 48"
CW1, CW2, CW7, CW8, CW9, CW11, CW14	36" x 36"	48" x 48"
CW3, CW4, CW5, CW6, CW8-3, CW10, CW12	48" x 48"	48" x 48"

SPACING

Posted Speed	Sign △ Spacing "X"
MPH	Feet (Apprx.)
30	120
35	160
40	240
45	320
50	400
55	500[2]
60	600[2]
65	700[2]
70	800[2]
75	900[2]
80	1000[2]
✱	✱[3]

✱ For typical sign spacings on divided highways, expressways and freeways, see Part 6 of the "Texas Manual on Uniform Traffic Control Devices" (TMUTCD) typical application diagrams or TCP Standard Sheets.

△ Minimum distance from work area to first Advance Warning sign nearest the work area and/or distance between each additional sign.

GENERAL NOTES

1. Special or larger size signs may be used as necessary.
2. Distance between signs should be increased as required to have 1500 feet advance warning.
3. Distance between signs should be increased as required to have 1/2 mile or more advance warning.
4. 36" x 36" "ROAD WORK AHEAD" (CW20-1D)signs may be used on low volume crossroads at the discretion of the Engineer as per TMUTCD Part 5. See Note 2 under "Typical Location of Crossroad Signs".
5. Only diamond shaped warning sign sizes are indicated.
6. See sign size listing in "TMUTCD", Sign Appendix or the "Standard Highway Sign Designs for Texas" manual for complete list of available sign design sizes.

WORK AREAS IN MULTIPLE LOCATIONS WITHIN CSJ LIMITS

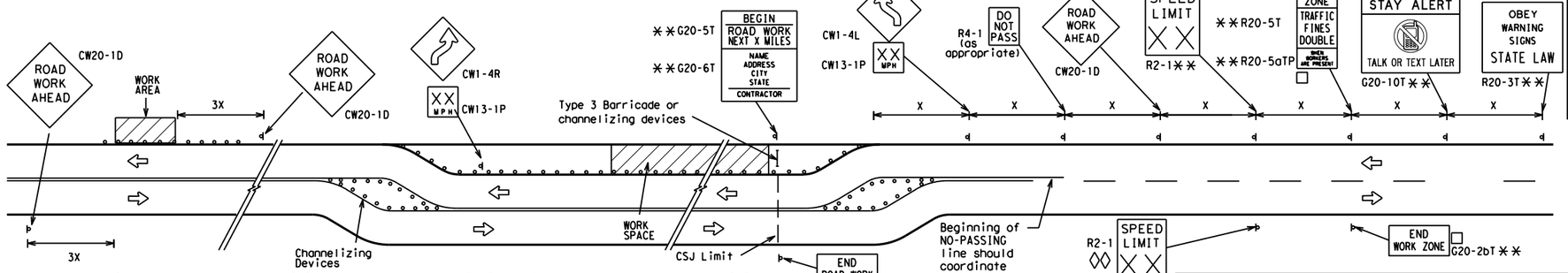

When extended distances occur between minimal work spaces, the Engineer/Inspector should ensure additional "ROAD WORK AHEAD"(CW20-1D)signs are placed in advance of these work areas to remind drivers they are still within the project limits. See the applicable TCP sheets for exact location and spacing of signs and channelizing devices.

SAMPLE LAYOUT OF SIGNING FOR WORK BEGINNING AT THE CSJ LIMITS

SAMPLE LAYOUT OF SIGNING FOR WORK BEGINNING DOWNSTREAM OF THE CSJ LIMITS

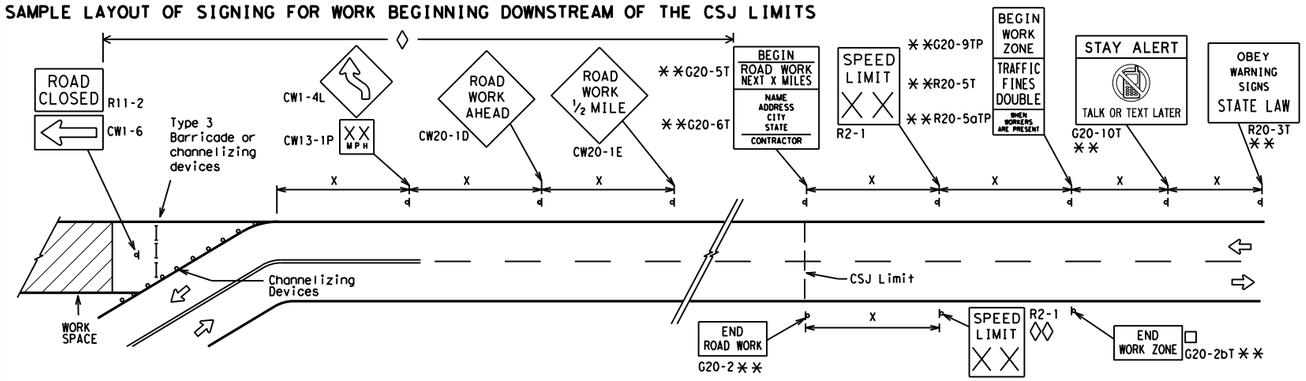

NOTES

The Contractor shall determine the appropriate distance to be placed on the G20-1 series signs and "BEGIN ROAD WORK NEXT X MILES"(G20-5T)sign for each specific project. This distance shall replace the "X" and shall be rounded to the nearest whole mile with the approval of the Engineer. No decimals shall be used.

□ The "BEGIN WORK ZONE"(G20-9TP) and "END WORK ZONE" (G20-2bT) shall be used as shown on the sample layout when advance signs are required outside the CSJ Limits. They inform the motorist of entering or leaving a part of the work zone lying outside the CSJ Limits where traffic fines may double if workers are present.

✱✱ CSJ limit signing is required for highway construction and maintenance work, with the exception of mobile operations.

◊ Area for placement of "ROAD WORK AHEAD" (CW20-1D)sign and other signs or devices as called for on the Traffic Control Plan.

◊◊ Contractor will install a regulatory speed limit sign at the end of the work zone.

LEGEND	
⊢⊣	Type 3 Barricade
○ ○ ○	Channelizing Devices
▬	Sign
X	See Typical Construction Warning Sign Size and Spacing chart or the TMUTCD for sign spacing requirements.

SHEET 2 OF 12

Texas Department of Transportation — Traffic Safety Division Standard

BARRICADE AND CONSTRUCTION PROJECT LIMIT

BC(2)-21

FILE: bc-21.dgn	DN: TxDOT	CK: TxDOT	DW: TxDOT	CK: TxDOT
© TxDOT November 2002	CONT	SECT	JOB	HIGHWAY
REVISIONS 9-07 8-14 7-13 5-21	DIST	COUNTY		SHEET NO.

DISCLAIMER: The use of this standard is governed by the "Texas Engineering Practice Act". No warranty of any kind is made by TxDOT for any purpose whatsoever. TxDOT assumes no responsibility for the conversion of this standard to other formats or for incorrect results or damages resulting from its use.

DATE:
FILE:

TYPICAL APPLICATION OF WORK ZONE SPEED LIMIT SIGNS

Work zone speed limits shall be regulatory, established in accordance with the "Procedures for Establishing Speed Zones," and approved by the Texas Transportation Commission, or by City Ordinance when within Incorporated City Limits.

Reduced speeds should only be posted in the vicinity of work activity and not throughout the entire project.

Regulatory work zone speed signs (R2-1) shall be removed or covered during periods when they are not needed.

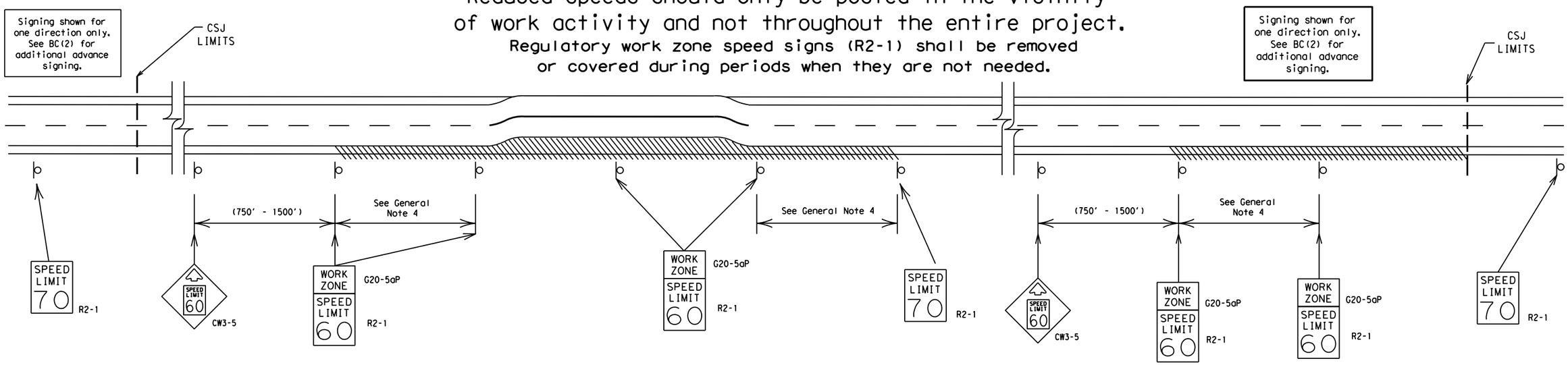

GUIDANCE FOR USE:

LONG/INTERMEDIATE TERM WORK ZONE SPEED LIMITS

This type of work zone speed limit should be included on the design of the traffic control plans when restricted geometrics with a lower design speed are present in the work zone and modification of the geometrics to a higher design speed is not feasible.

Long/Intermediate Term Work Zone Speed Limit signs, when approved as described above, should be posted and visible to the motorist when work activity is present. Work activity may also be defined as a change in the roadway that requires a reduced speed for motorists to safely negotiate the work area, including:

a) rough road or damaged pavement surface
b) substantial alteration of roadway geometrics (diversions)
c) construction detours
d) grade
e) width
f) other conditions readily apparent to the driver

As long as any of these conditions exist, the work zone speed limit signs should remain in place.

SHORT TERM WORK ZONE SPEED LIMITS

This type of work zone speed limit may be included on the design of the traffic control plans when workers or equipment are not behind concrete barrier, when work activity is within 10 feet of the traveled way or actually in the traveled way.

Short Term Work Zone Speed Limit signs should be posted and visible to the motorists only when work activity is present. When work activity is not present, signs shall be removed or covered.
(See Removing or Covering on BC(4)).

GENERAL NOTES

1. Regulatory work zone speed limits should be used only for sections of construction projects where speed control is of major importance.
2. Regulatory work zone speed limit signs shall be placed on supports at a 7 foot minimum mounting height.
3. Speed zone signs are illustrated for one direction of travel and are normally posted for each direction of travel.
4. Frequency of work zone speed limit signs should be:
   40 mph and greater 0.2 to 2 miles
   35 mph and less 0.2 to 1 mile
5. Regulatory speed limit signs shall have black legend and border on a white reflective background (See "Reflective Sheeting" on BC(4)).
6. Fabrication, erection and maintenance of the"ADVANCE SPEED LIMIT"(CW3-5)sign, "WORK ZONE"(G20-5aP) plaque and the "SPEED LIMIT"(R2-1)signs shall not be paid for directly, but shall be considered subsidiary to Item 502.
7. Turning signs from view, laying signs over or down will not be allowed, unless as otherwise noted under "REMOVING OR COVERING" on BC(4).
8. Techniques that may help reduce traffic speeds include but are not limited to:
   A. Law enforcement.
   B. Flagger stationed next to sign.
   C. Portable changeable message sign (PCMS).
   D. Low-power (drone) radar transmitter.
   E. Speed monitor trailers or signs.
9. Speeds shown on details above are for illustration only.
   Work Zone Speed Limits should only be posted as approved for each project.
10. For more specific guidance concerning the type of work, work zone conditions and factors impacting allowable regulatory construction speed zone reduction see TxDOT form #1204 in the TxDOT e-form system.

DISCLAIMER:
The use of this standard is governed by the "Texas Engineering Practice Act". No warranty of any kind is made by TxDOT for any purpose whatsoever. TxDOT assumes no responsibility for the conversion of this standard to other formats or for incorrect results or damages resulting from its use.

DATE:
FILE:

SHEET 3 OF 12

Texas Department of Transportation — Traffic Safety Division Standard

BARRICADE AND CONSTRUCTION WORK ZONE SPEED LIMIT

BC(3)-21

FILE: bc-21.dgn	DN: TxDOT	CK: TxDOT	DW: TxDOT	CK: TxDOT
©TxDOT November 2002	CONT	SECT	JOB	HIGHWAY
REVISIONS 9-07 8-14 7-13 5-21	DIST	COUNTY		SHEET NO.

DISCLAIMER:
The use of this standard is governed by the "Texas Engineering Practice Act". No warranty of any kind is made by TxDOT for any purpose whatsoever. TxDOT assumes no responsibility for the conversion of this standard to other formats or for incorrect results or damages resulting from its use.

TYPICAL MINIMUM CLEARANCES FOR LONG TERM AND INTERMEDIATE TERM SIGNS

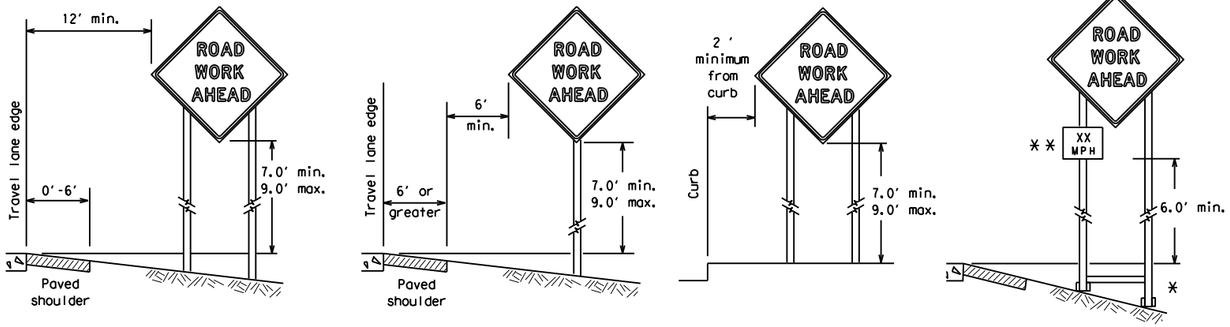

* When placing skid supports on unlevel ground, the leg post lengths must be adjusted so the sign appears straight and plumb. Objects shall NOT be placed under skids as a means of leveling.

** When plaques are placed on dual-leg supports, they should be attached to the upright nearest the travel lane. Supplemental plaques (advisory or distance) should not cover the surface of the parent sign.

ATTACHMENT FOR SIGN SUPPORTS

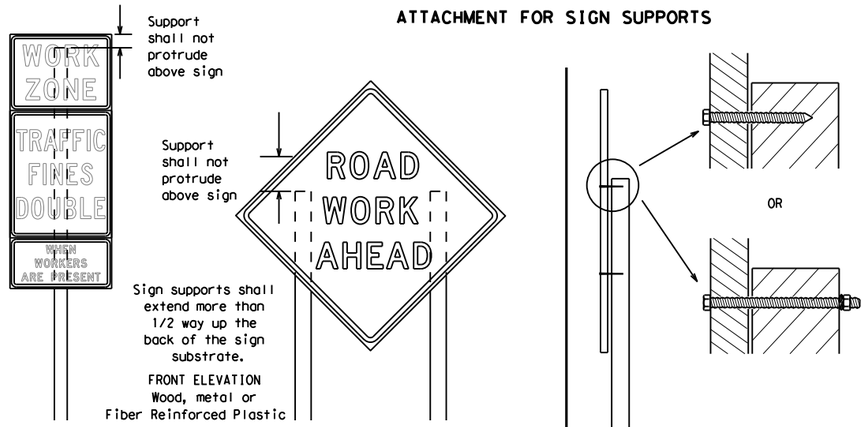

Attachment to wooden supports will be by bolts and nuts or screws. Use TxDOT's or manufacturer's recommended procedures for attaching sign substrates to other types of sign supports

Nails shall NOT be allowed. Each sign shall be attached directly to the sign support. Multiple signs shall not be joined or spliced by any means. Wood supports shall not be extended or repaired by splicing or other means.

Splicing embedded perforated square metal tubing in order to extend post height will only be allowed when the splice is made using four bolts, two above and two below the spice point. Splice must be located entirely behind the sign substrate, not near the base of the support. Splice insert lengths should be at least 5 times nominal post size, centered on the splice and of at least the same gauge material.

STOP/SLOW PADDLES

1. STOP/SLOW paddles are the primary method to control traffic by flaggers. The STOP/SLOW paddle size should be 24" x 24".
2. STOP/SLOW paddles shall be retroreflectorized when used at night.
3. STOP/SLOW paddles may be attached to a staff with a minimum length of 6' to the bottom of the sign.
4. Any lights incorporated into the STOP or SLOW paddle faces shall only be as specifically described in Section 6E.03 Hand Signaling Devices in the TMUTCD.

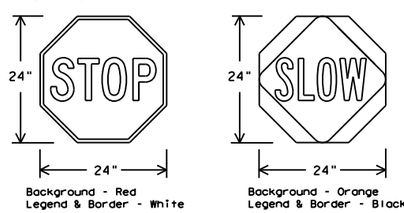

SHEETING REQUIREMENTS (WHEN USED AT NIGHT)		
USAGE	COLOR	SIGN FACE MATERIAL
BACKGROUND	RED	TYPE B OR C SHEETING
BACKGROUND	ORANGE	TYPE B_{FL} OR C_{FL} SHEETING
LEGEND & BORDER	WHITE	TYPE B OR C SHEETING
LEGEND & BORDER	BLACK	ACRYLIC NON-REFLECTIVE FILM

CONTRACTOR REQUIREMENTS FOR MAINTAINING PERMANENT SIGNS WITHIN THE PROJECT LIMITS

1. Permanent signs are used to give notice of traffic laws or regulations, call attention to conditions that are potentially hazardous to traffic operations, show route designations, destinations, directions, distances, services, points of interest, and other geographical, recreational, specific service (LOGO), or cultural information. Drivers proceeding through a work zone need the same, if not better route guidance as normally installed on a roadway without construction.
2. When permanent regulatory or warning signs conflict with work zone conditions, remove or cover the permanent signs until the permanent sign message matches the roadway condition. For details for covering large guide signs see the TS-CD standard.
3. When existing permanent signs are moved and relocated due to construction purposes, they shall be visible to motorists at all times.
4. If existing signs are to be relocated on their original supports, they shall be installed on crashworthy bases as shown on the SMD Standard sheets. The signs shall meet the required mounting heights shown on the BC Sheets or the SMD Standards. This work should be paid for under the appropriate pay item for relocating existing signs.
5. If permanent signs are to be removed and relocated using temporary supports, the Contractor shall use crashworthy supports as shown on the BC standard sheets, TLRS standard sheets or the CWZTCD list. The signs shall meet the required mounting heights shown on the BC, or the SMD standard sheets during construction. This work should be paid for under the appropriate pay item for relocating existing signs.
6. Any sign or traffic control device that is struck or damaged by the Contractor or his/her construction equipment shall be replaced as soon as possible by the Contractor to ensure proper guidance for the motorists. This will be subsidiary to Item 502.

GENERAL NOTES FOR WORK ZONE SIGNS

1. Contractor shall install and maintain signs in a straight and plumb condition and/or as directed by the Engineer.
2. Wooden sign posts shall be painted white.
3. Barricades shall NOT be used as sign supports.
4. All signs shall be installed in accordance with the plans or as directed by the Engineer. Signs shall be used to regulate, warn, and guide the traveling public safely through the work zone.
5. The Contractor may furnish either the sign design shown in the plans or in the "Standard Highway Sign Designs for Texas" (SHSD). The Engineer/Inspector may require the Contractor to furnish other work zone signs that are shown in the TMUTCD but may have been omitted from the plans. Any variation in the plans shall be documented by written agreement between the Engineer and the Contractor's Responsible Person. All changes must be documented in writing before being implemented. This can include documenting the changes in the Inspector's TxDOT diary and having both the Inspector and Contractor initial and date the agreed upon changes.
6. The Contractor shall furnish sign supports listed in the "Compliant Work Zone Traffic Control Device List" (CWZTCD) for small roadside signs. Supports for temporary large roadside signs shall meet the requirements detailed on the Temporary Large Roadside Signs (TLRS) standard sheets. The Contractor shall install the sign support in accordance with the manufacturer's recommendations. If there is a question regarding installation procedures, the Contractor shall furnish the Engineer a copy of the manufacturer's installation recommendations so the Engineer can verify the correct procedures are being followed.
7. The Contractor is responsible for installing signs on approved supports and replacing signs with damaged or cracked substrates and/or damaged or marred reflective sheeting as directed by the Engineer/Inspector.
8. Identification markings may be shown only on the back of the sign substrate. The maximum height of letters and/or company logos used for identification shall be 1 inch.
9. The Contractor shall replace damaged wood posts. New or damaged wood sign posts shall not be spliced.

DURATION OF WORK (as defined by the "Texas Manual on Uniform Traffic Control Devices" Part 6)

1. The types of sign supports, sign mounting height, the size of signs, and the type of sign substrates can vary based on the type of work being performed. The Engineer is responsible for selecting the appropriate size sign for the type of work being performed. The Contractor is responsible for ensuring the sign support, sign mounting height and substrate meets manufacturer's recommendations in regard to crashworthiness and duration of work requirements.
   a. Long-term stationary - work that occupies a location more than 3 days.
   b. Intermediate-term stationary - work that occupies a location more than one daylight period up to 3 days, or nighttime work lasting more than one hour.
   c. Short-term stationary - daytime work that occupies a location for more than 1 hour in a single daylight period.
   d. Short, duration - work that occupies a location up to 1 hour.
   e. Mobile - work that moves continuously or intermittently (stopping for up to approximately 15 minutes.)

SIGN MOUNTING HEIGHT

1. The bottom of Long-term/Intermediate-term signs shall be at least 7 feet, but not more than 9 feet, above the paved surface, except as shown for supplemental plaques mounted below other signs.
2. The bottom of Short-term/Short Duration signs shall be a minimum of 1 foot above the pavement surface but no more than 2 feet above the ground.
3. Long-term/Intermediate-term Signs may be used in lieu of Short-term/Short Duration signing.
4. Short-term/Short Duration signs shall be used only during daylight and shall be removed at the end of the workday or raised to appropriate Long-term/Intermediate sign height.
5. Regulatory signs shall be mounted at least 7 feet, but not more than 9 feet, above the paved surface regardless of work duration.

SIZE OF SIGNS

1. The Contractor shall furnish the sign sizes shown on BC (2) unless otherwise shown in the plans or as directed by the Engineer.

SIGN SUBSTRATES

1. The Contractor shall ensure the sign substrate is installed in accordance with the manufacturer's recommendations for the type of sign support that is being used. The CWZTCD lists each substrate that can be used on the different types and models of sign supports.
2. "Mesh" type materials are NOT an approved sign substrate, regardless of the tightness of the weave.
3. All wooden individual sign panels fabricated from 2 or more pieces shall have one or more plywood cleat, 1/2" thick by 6" wide, fastened to the back of the sign and extending fully across the sign. The cleat shall be attached to the back of the sign using wood screws that do not penetrate the face of the sign panel. The screws shall be placed on both sides of the splice and spaced at 6" centers. The Engineer may approve other methods of splicing the sign face.

REFLECTIVE SHEETING

1. All signs shall be retroreflective and constructed of sheeting meeting the color and retro-reflectivity requirements of DMS-8300 for rigid signs or DMS-8310 for roll-up signs. The web address for DMS specifications is shown on BC(1).
2. White sheeting, meeting the requirements of DMS-8300 Type A, shall be used for signs with a white background.
3. Orange sheeting, meeting the requirements of DMS-8300 Type B_{FL} or Type C_{FL}, shall be used for rigid signs with orange backgrounds.

SIGN LETTERS

1. All sign letters and numbers shall be clear, and open rounded type uppercase alphabet letters as approved by the Federal Highway Administration (FHWA) and as published in the "Standard Highway Sign Design for Texas" manual. Signs, letters and numbers shall be of first class workmanship in accordance with Department Standards and Specifications.

REMOVING OR COVERING

1. When sign messages may be confusing or do not apply, the signs shall be removed or completely covered.
2. Long-term stationary or intermediate stationary signs installed on square metal tubing may be turned away from traffic 90 degrees when the sign message is not applicable. This technique may not be used for signs installed in the median of divided highways or near any intersections where the sign may be seen from approaching traffic.
3. Signs installed on wooden skids shall not be turned at 90 degree angles to the roadway. These signs should be removed or completely covered when not required.
4. When signs are covered, the material used shall be opaque, such as heavy mil black plastic, or other materials which will cover the entire sign face and maintain their opaque properties under automobile headlights at night, without damaging the sign sheeting.
5. Burlap shall NOT be used to cover signs.
6. Duct tape or other adhesive material shall NOT be affixed to a sign face.
7. Signs and anchor stubs shall be removed and holes backfilled upon completion of work.

SIGN SUPPORT WEIGHTS

1. Where sign supports require the use of weights to keep from turning over, the use of sandbags with dry, cohesionless sand should be used.
2. The sandbags will be tied shut to keep the sand from spilling and to maintain a constant weight.
3. Rock, concrete, iron, steel or other solid objects shall not be permitted for use as sign support weights.
4. Sandbags should weigh a minimum of 35 lbs and a maximum of 50 lbs.
5. Sandbags shall be made of a durable material that tears upon vehicular impact. Rubber (such as tire inner tubes) shall NOT be used.
6. Rubber ballasts designed for channelizing devices should not be used for ballast on portable sign supports. Sign supports designed and manufactured with rubber bases may be used when shown on the CWZTCD list.
7. Sandbags shall only be placed along or laid over the base supports of the traffic control device and shall not be suspended above ground level or hung with rope, wire, chains or other fasteners. Sandbags shall be placed along the length of the skids to weigh down the sign support.
8. Sandbags shall NOT be placed under the skid and shall not be used to level sign supports placed on slopes.

FLAGS ON SIGNS

1. Flags may be used to draw attention to warning signs. When used, the flag shall be 16 inches square or larger and shall be orange or fluorescent red-orange in color. Flags shall not be allowed to cover any portion of the sign face.

Texas Department of Transportation — Traffic Safety Division Standard

BARRICADE AND CONSTRUCTION TEMPORARY SIGN NOTES

BC(4)-21

FILE: bc-21.dgn	DN: TxDOT	CK: TxDOT	DW: TxDOT	CK: TxDOT
©TxDOT November 2002	CONT	SECT	JOB	HIGHWAY
REVISIONS 9-07 8-14, 7-13 5-21	DIST		COUNTY	SHEET NO.

DATE:
FILE:

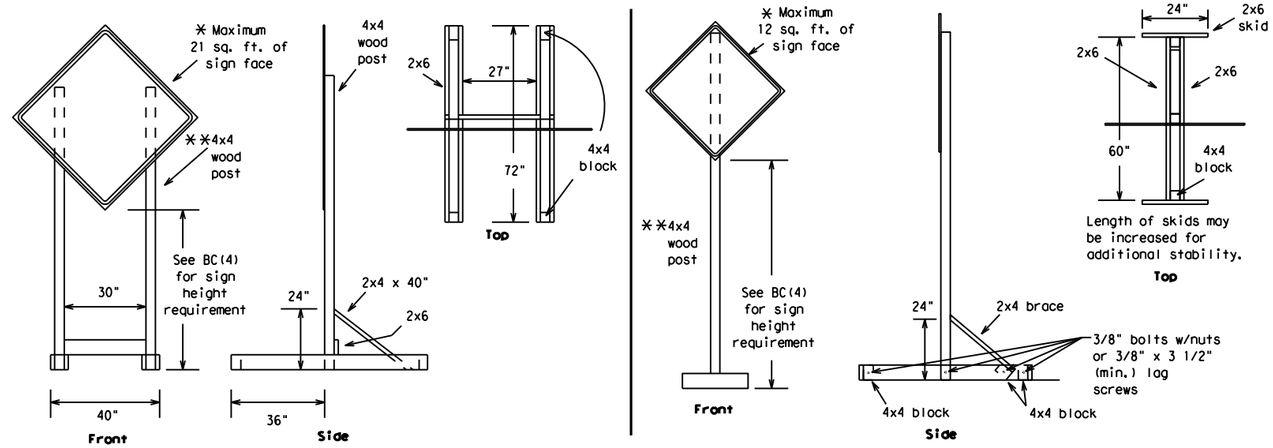

SKID MOUNTED WOOD SIGN SUPPORTS

* LONG/INTERMEDIATE TERM STATIONARY - PORTABLE SKID MOUNTED SIGN SUPPORTS

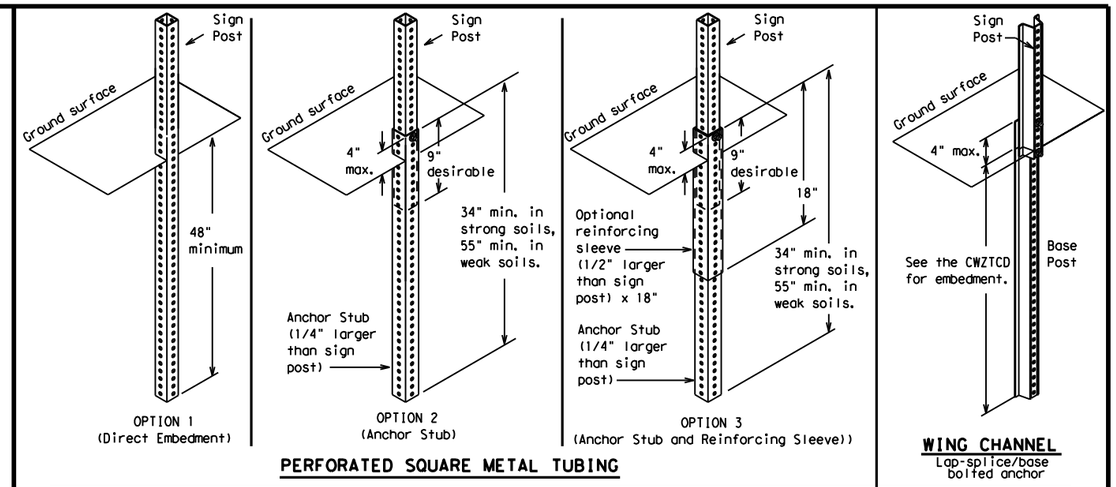

GROUND MOUNTED SIGN SUPPORTS

Refer to the CWZTCD and the manufacturer's installation procedure for each type sign support.
The maximum sign square footage shall adhere to the manufacturer's recommendation.
Two post installations can be used for larger signs.

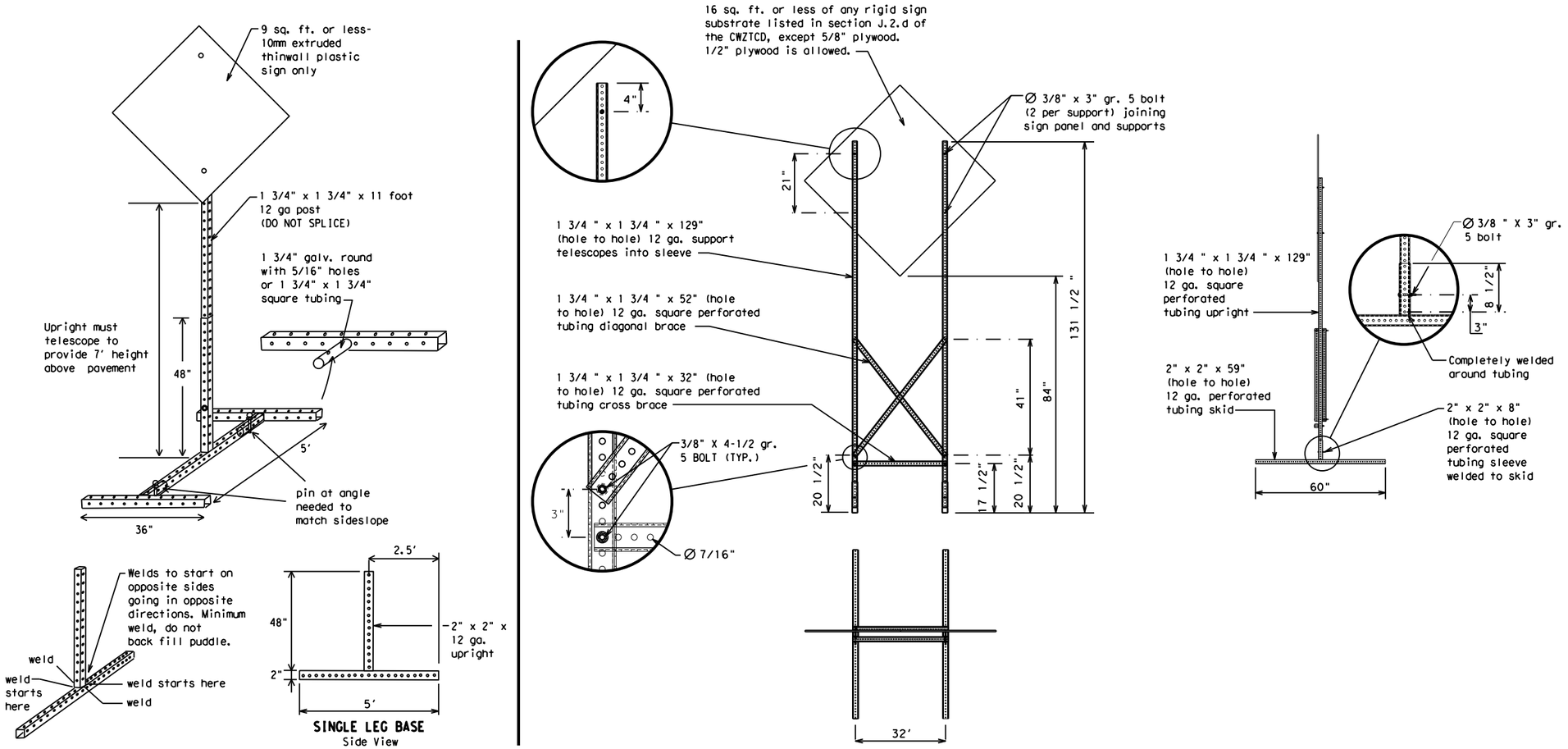

SKID MOUNTED PERFORATED SQUARE STEEL TUBING SIGN SUPPORTS

* LONG/INTERMEDIATE TERM STATIONARY - PORTABLE SKID MOUNTED SIGN SUPPORTS

WEDGE ANCHORS

Both steel and plastic Wedge Anchor Systems as shown on the SMD Standard Sheets may be used as temporary sign supports for signs up to 10 square feet of sign face. They may be set in concrete or in sturdy soils if approved by the Engineer. (See web address for "Traffic Engineering Standard Sheets" on BC(1)).

OTHER DESIGNS

MORE DETAILS OF APPROVED LONG/INTERMEDIATE AND SHORT TERM SUPPORTS CAN BE FOUND ON THE CWZTCD LIST. SEE BC(1) FOR WEBSITE LOCATION.

GENERAL NOTES

1. Nails may be used in the assembly of wooden sign supports, but 3/8" bolts with nuts or 3/8" x 3 1/2" lag screws must be used on every joint for final connection.
2. No more than 2 sign posts shall be placed within a 7 ft. circle, except for specific materials noted on the CWZTCD List.
3. When project is completed, all sign supports and foundations shall be removed from the project site. This will be considered subsidiary to Item 502.

* See BC(4) for definition of "Work Duration."

** Wood sign posts MUST be one piece. Splicing will NOT be allowed. Posts shall be painted white.

☐ See the CWZTCD for the type of sign substrate that can be used for each approved sign support.

Texas Department of Transportation — Traffic Safety Division Standard

BARRICADE AND CONSTRUCTION TYPICAL SIGN SUPPORT

BC(5)-21

FILE: bc-21.dgn	DN: TxDOT	CK: TxDOT	DW: TxDOT	CK: TxDOT
© TxDOT November 2002	CONT	SECT	JOB	HIGHWAY
REVISIONS				
9-07 8-14	DIST	COUNTY		SHEET NO.
7-13 5-21				

DISCLAIMER:
The use of this standard is governed by the "Texas Engineering Practice Act". No warranty of any kind is made by TxDOT for any purpose whatsoever. TxDOT assumes no responsibility for the conversion of this standard to other formats or for incorrect results or damages resulting from its use.

DATE:
FILE:

WHEN NOT IN USE, REMOVE THE PCMS FROM THE RIGHT-OF-WAY OR PLACE THE PCMS BEHIND BARRIER OR GUARDRAIL WITH SIGN PANEL TURNED PARALLEL TO TRAFFIC

PORTABLE CHANGEABLE MESSAGE SIGNS

1. The Engineer/Inspector shall approve all messages used on portable changeable message signs (PCMS).
2. Messages on PCMS should contain no more than 8 words (about four to eight characters per word), not including simple words such as "TO," "FOR," "AT," etc.
3. Messages should consist of a single phase, or two phases that alternate. Three-phase messages are not allowed. Each phase of the message should convey a single thought, and must be understood by itself.
4. Use the word "EXIT" to refer to an exit ramp on a freeway; i.e., "EXIT CLOSED." Do not use the term "RAMP."
5. Always use the route or interstate designation (IH, US, SH, FM) along with the number when referring to a roadway.
6. When in use, the bottom of a stationary PCMS message panel should be a minimum 7 feet above the roadway, where possible.
7. The message term "WEEKEND" should be used only if the work is to start on Saturday morning and end by Sunday evening at midnight. Actual days and hours of work should be displayed on the PCMS if work is to begin on Friday evening and/or continue into Monday morning.
8. The Engineer/Inspector may select one of two options which are available for displaying a two-phase message on a PCMS. Each phase may be displayed for either four seconds each or for three seconds each.
9. Do not "flash" messages or words included in a message. The message should be steady burn or continuous while displayed.
10. Do not present redundant information on a two-phase message; i.e., keeping two lines of the message the same and changing the third line.
11. Do not use the word "Danger" in message.
12. Do not display the message "LANES SHIFT LEFT" or "LANES SHIFT RIGHT" on a PCMS. Drivers do not understand the message.
13. Do not display messages that scroll horizontally or vertically across the face of the sign.
14. The following table lists abbreviated words and two-word phrases that are acceptable for use on a PCMS. Both words in a phrase must be displayed together. Words or phrases not on this list should not be abbreviated, unless shown in the TMUTCD.
15. PCMS character height should be at least 18 inches for trailer mounted units. They should be visible from at least 1/2 (.5) mile and the text should be legible from at least 600 feet at night and 800 feet in daylight. Truck mounted units must have a character height of 10 inches and must be legible from at least 400 feet.
16. Each line of text should be centered on the message board rather than left or right justified.
17. If disabled, the PCMS should default to an illegible display that will not alarm motorists and will only be used to alert workers that the PCMS has malfunctioned. A pattern such as a series of horizontal solid bars is appropriate.

WORD OR PHRASE	ABBREVIATION
Access Road	ACCS RD
Alternate	ALT
Avenue	AVE
Best Route	BEST RTE
Boulevard	BLVD
Bridge	BRDG
Cannot	CANT
Center	CTR
Construction Ahead	CONST AHD
CROSSING	XING
Detour Route	DETOUR RTE
Do Not	DONT
East	E
Eastbound	(route) E
Emergency	EMER
Emergency Vehicle	EMER VEH
Entrance, Enter	ENT
Express Lane	EXP LN
Expressway	EXPWY
XXXX Feet	XXXX FT
Fog Ahead	FOG AHD
Freeway	FRWY, FWY
Freeway Blocked	FWY BLKD
Friday	FRI
Hazardous Driving	HAZ DRIVING
Hazardous Material	HAZMAT
High-Occupancy	HOV
Vehicle Highway	HWY
Hour(s)	HR, HRS
Information	INFO
It Is	ITS
Junction	JCT
Left	LFT
Left Lane	LFT LN
Lane Closed	LN CLOSED
Lower Level	LWR LEVEL
Maintenance	MAINT

WORD OR PHRASE	ABBREVIATION
Major	MAJ
Miles	MI
Miles Per Hour	MPH
Minor	MNR
Monday	MON
Normal	NORM
North	N
Northbound	(route) N
Parking	PKING
Road	RD
Right Lane	RT LN
Saturday	SAT
Service Road	SERV RD
Shoulder	SHLDR
Slippery	SLIP
South	S
Southbound	(route) S
Speed	SPD
Street	ST
Sunday	SUN
Telephone	PHONE
Temporary	TEMP
Thursday	THURS
To Downtown	TO DWNTN
Traffic	TRAF
Travelers	TRVLRS
Tuesday	TUES
Time Minutes	TIME MIN
Upper Level	UPR LEVEL
Vehicles (s)	VEH, VEHS
Warning	WARN
Wednesday	WED
Weight Limit	WT LIMIT
West	W
Westbound	(route) W
Wet Pavement	WET PVMT
Will Not	WONT

Roadway designation # IH-number, US-number, SH-number, FM-number

RECOMMENDED PHASES AND FORMATS FOR PCMS MESSAGES DURING ROADWORK ACTIVITIES

(The Engineer may approve other messages not specifically covered here.)

Phase 1: Condition Lists

Road/Lane/Ramp Closure List

FREEWAY CLOSED X MILE	FRONTAGE ROAD CLOSED
ROAD CLOSED AT SH XXX	SHOULDER CLOSED XXX FT
ROAD CLSD AT FM XXXX	RIGHT LN CLOSED XXX FT
RIGHT X LANES CLOSED	RIGHT X LANES OPEN
CENTER LANE CLOSED	DAYTIME LANE CLOSURES
NIGHT LANE CLOSURES	I-XX SOUTH EXIT CLOSED
VARIOUS LANES CLOSED	EXIT XXX CLOSED X MILE
EXIT CLOSED	RIGHT LN TO BE CLOSED
MALL DRIVEWAY CLOSED	X LANES CLOSED TUE - FRI
XXXXXXXX BLVD CLOSED	

Other Condition List

ROADWORK XXX FT	ROAD REPAIRS XXXX FT
FLAGGER XXXX FT	LANE NARROWS XXXX FT
RIGHT LN NARROWS XXXX FT	TWO-WAY TRAFFIC XX MILE
MERGING TRAFFIC XXXX FT	CONST TRAFFIC XXX FT
LOOSE GRAVEL XXXX FT	UNEVEN LANES XXXX FT
DETOUR X MILE	ROUGH ROAD XXXX FT
ROADWORK PAST SH XXXX	ROADWORK NEXT FRI-SUN
BUMP XXXX FT	US XXX EXIT X MILES
TRAFFIC SIGNAL XXXX FT	LANES SHIFT *

* LANES SHIFT in Phase 1 must be used with STAY IN LANE in Phase 2.

Phase 2: Possible Component Lists

Action to Take/Effect on Travel List

MERGE RIGHT	FORM X LINES RIGHT
DETOUR NEXT X EXITS	USE XXXXX RD EXIT
USE EXIT XXX	USE EXIT I-XX NORTH
STAY ON US XXX SOUTH	USE I-XX E TO I-XX N
TRUCKS USE US XXX N	WATCH FOR TRUCKS
WATCH FOR TRUCKS	EXPECT DELAYS
EXPECT DELAYS	PREPARE TO STOP
REDUCE SPEED XXX FT	END SHOULDER USE
USE OTHER ROUTES	WATCH FOR WORKERS
STAY IN LANE *	

Location List

AT FM XXXX
BEFORE RAILROAD CROSSING
NEXT X MILES
PAST US XXX EXIT
XXXXXXX TO XXXXXXX
US XXX TO FM XXXX

Warning List

SPEED LIMIT XX MPH
MAXIMUM SPEED XX MPH
MINIMUM SPEED XX MPH
ADVISORY SPEED XX MPH
RIGHT LANE EXIT
USE CAUTION
DRIVE SAFELY
DRIVE WITH CARE

** Advance Notice List

TUE-FRI XX AM- X PM
APR XX- XX X PM-X AM
BEGINS MONDAY
BEGINS MAY XX
MAY X-X XX PM - XX AM
NEXT FRI-SUN
XX AM TO XX PM
NEXT TUE AUG XX
TONIGHT XX PM- XX AM

** See Application Guidelines Note 6.

APPLICATION GUIDELINES

1. Only 1 or 2 phases are to be used on a PCMS.
2. The 1st phase (or both) should be selected from the "Road/Lane/Ramp Closure List" and the "Other Condition List".
3. A 2nd phase can be selected from the "Action to Take/Effect on Travel, Location, General Warning, or Advance Notice Phase Lists".
4. A Location Phase is necessary only if a distance or location is not included in the first phase selected.
5. If two PCMS are used in sequence, they must be separated by a minimum of 1000 ft. Each PCMS shall be limited to two phases, and should be understandable by themselves.
6. For advance notice, when the current date is within seven days of the actual work date, calendar days should be replaced with days of the week. Advance notification should typically be for no more than one week prior to the work.

WORDING ALTERNATIVES

1. The words RIGHT, LEFT and ALL can be interchanged as appropriate.
2. Roadway designations IH, US, SH, FM and LP can be interchanged as appropriate.
3. EAST, WEST, NORTH and SOUTH (or abbreviations E, W, N and S) can be interchanged as appropriate.
4. Highway names and numbers replaced as appropriate.
5. ROAD, HIGHWAY and FREEWAY can be interchanged as needed.
6. AHEAD may be used instead of distances if necessary.
7. FT and MI, MILE and MILES interchanged as appropriate.
8. AT, BEFORE and PAST interchanged as needed.
9. Distances or AHEAD can be eliminated from the message if a location phase is used.

PCMS SIGNS WITHIN THE R.O.W. SHALL BE BEHIND GUARDRAIL OR CONCRETE BARRIER OR SHALL HAVE A MINIMUM OF FOUR (4) PLASTIC DRUMS PLACED PERPENDICULAR TO TRAFFIC ON THE UPSTREAM SIDE OF THE PCMS, WHEN EXPOSED TO ONE DIRECTION OF TRAFFIC. WHEN EXPOSED TO TWO WAY TRAFFIC, THE FOUR DRUMS SHOULD BE PLACED WITH ONE DRUM AT EACH OF THE FOUR CORNERS OF THE UNIT.

FULL MATRIX PCMS SIGNS

1. When Full Matrix PCMS signs are used, the character height and legibility/visibility requirements shall be maintained as listed in Note 15 under "PORTABLE CHANGEABLE MESSAGE SIGNS" above.
2. When symbol signs, such as the "Flagger Symbol"(CW20-7) are represented graphically on the Full Matrix PCMS sign and, with the approval of the Engineer, it shall maintain the legibility/visibility requirement listed above.
3. When symbol signs are represented graphically on the Full Matrix PCMS, they shall only supplement the use of the static sign represented, and shall not substitute for, or replace that sign.
4. A full matrix PCMS may be used to simulate a flashing arrow board provided it meets the visibility, flash rate and dimming requirements on BC(7), for the same size arrow.

DISCLAIMER:
The use of this standard is governed by the "Texas Engineering Practice Act". No warranty of any kind is made by TxDOT for any purpose whatsoever. TxDOT assumes no responsibility for the conversion of this standard to other formats or for incorrect results or damages resulting from its use.

DATE:
FILE:

Texas Department of Transportation — Traffic Safety Division Standard

BARRICADE AND CONSTRUCTION PORTABLE CHANGEABLE MESSAGE SIGN (PCMS)

BC(6)-21

FILE: bc-21.dgn	DN: TxDOT	CK: TxDOT	DW: TxDOT	CK: TxDOT
© TxDOT November 2002	CONT	SECT	JOB	HIGHWAY
REVISIONS 9-07 8-14 7-13 5-21	DIST		COUNTY	SHEET NO.

1. Barrier Reflectors shall be pre-qualified, and conform to the color and reflectivity requirements of DMS-8600. A list of prequalified Barrier Reflectors can be found at the Material Producer List web address shown on BC(1).
2. Color of Barrier Reflectors shall be as specified in the TMUTCD. The cost of the reflectors shall be considered subsidiary to Item 512.

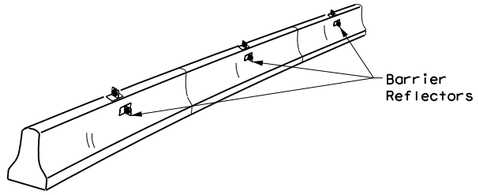

CONCRETE TRAFFIC BARRIER (CTB)

3. Where traffic is on one side of the CTB, two (2) Barrier Reflectors shall be mounted in approximately the midsection of each section of CTB. An alternate mounting location is uniformly spaced at one end of each CTB. This will allow for attachment of a barrier grapple without damaging the reflector. The Barrier Reflector mounted on the side of the CTB shall be located directly below the reflector mounted on top of the barrier, as shown in the detail above.
4. Where CTB separates two-way traffic, three barrier reflectors shall be mounted on each section of CTB. The reflector unit on top shall have two yellow reflective faces (Bi-Directional)while the reflectors on each side of the barrier shall have one yellow reflective face, as shown in the detail above.
5. When CTB separates traffic traveling in the same direction, no barrier reflectors will be required on top of the CTB.
6. Barrier Reflector units shall be yellow or white in color to match the edgeline being supplemented.
7. Maximum spacing of Barrier Reflectors is forty (40) feet.
8. Pavement markers or temporary flexible-reflective roadway marker tabs shall NOT be used as CTB delineation.
9. Attachment of Barrier Reflectors to CTB shall be per manufacturer's recommendations.
10. Missing or damaged Barrier Reflectors shall be replaced as directed by the Engineer.
11. Single slope barriers shall be delineated as shown on the above detail.

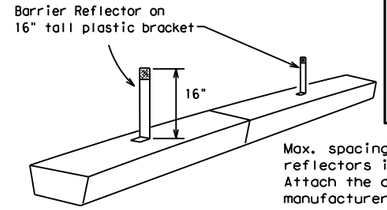

Max. spacing of barrier reflectors is 20 feet. Attach the delineators as per manufacturer's recommendations.

LOW PROFILE CONCRETE BARRIER (LPCB)

LOW PROFILE CONCRETE BARRIER (LPCB) USED IN WORK ZONES

LPCB is approved for use in work zone locations, where the posted speed is 45mph, or less. See Roadway Standard Sheet LPCB.

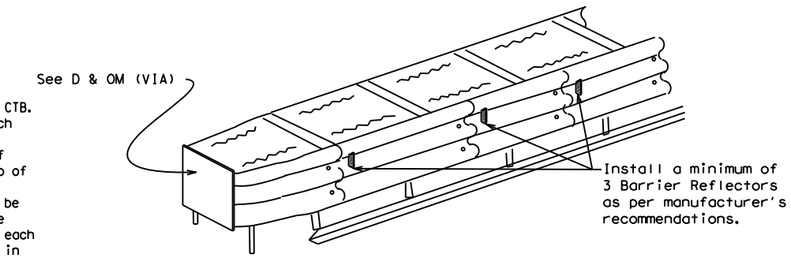

DELINEATION OF END TREATMENTS

END TREATMENTS FOR CTB'S USED IN WORK ZONES

End treatments used on CTB's in work zones shall meet the apppropriate crashworthy standards as defined in the Manual for Assessing Safety Hardware (MASH). Refer to the CWZTCD List for approved end treatments and manufacturers.

BARRIER REFLECTORS FOR CONCRETE TRAFFIC BARRIER AND ATTENUATORS

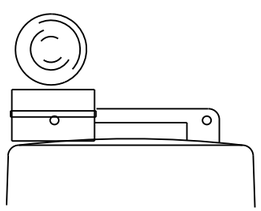

Type C Warning Light or approved substitute mounted on a drum adjacent to the travel way.

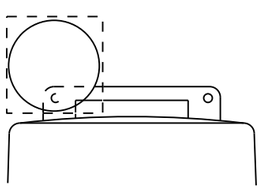

Warning reflector may be round or square.Must have a yellow reflective surface area of at least 30 square inches

WARNING LIGHTS

1. Warning lights shall meet the requirements of the TMUTCD.
2. Warning lights shall NOT be installed on barricades.
3. Type A-Low Intensity Flashing Warning Lights are commonly used with drums. They are intended to warn of or mark a potentially hazardous area. Their use shall be as indicated on this sheet and/or other sheets of the plans by the designation "FL". The Type A Warning Lights shall not be used with signs manufactured with Type B_{FL} or C_{FL} Sheeting meeting the requirements of Departmental Material Specification DMS-8300.
4. Type-C and Type D 360 degree Steady Burn Lights are intended to be used in a series for delineation to supplement other traffic control devices. Their use shall be as indicated on this sheet and/or other sheets of the plans by the designation "SB".
5. The Engineer/Inspector or the plans shall specify the location and type of warning lights to be installed on the traffic control devices.
6. When required by the Engineer, the Contractor shall furnish a copy of the warning lights certification. The warning light manufacturer will certify the warning lights meet the requirements of the latest ITE Purchase Specifications for Flashing and Steady-Burn Warning Lights.
7. When used to delineate curves, Type-C and Type D Steady Burn Lights should only be placed on the outside of the curve, not the inside.
8. The location of warning lights and warning reflectors on drums shall be as shown elsewhere in the plans.

WARNING LIGHTS MOUNTED ON PLASTIC DRUMS

1. Type A flashing warning lights are intended to warn drivers that they are approaching or are in a potentially hazardous area.
2. Type A random flashing warning lights are not intended for delineation and shall not be used in a series.
3. A series of sequential flashing warning lights placed on channelizing devices to form a merging taper may be used for delineation. If used, the successive flashing of the sequential warning lights should occur from the beginning of the taper to the end of the merging taper in order to identify the desired vehicle path. The rate of flashing for each light shall be 65 flashes per minute, plus or minus 10 flashes.
4. Type C and D steady-burn warning lights are intended to be used in a series to delineate the edge of the travel lane on detours, on lane changes, on lane closures, and on other similar conditions.
5. Type A, Type C and Type D warning lights shall be installed at locations as detailed on other sheets in the plans.
6. Warning lights shall not be installed on a drum that has a sign, chevron or vertical panel.
7. The maximum spacing for warning lights on drums should be identical to the channelizing device spacing.

WARNING REFLECTORS MOUNTED ON PLASTIC DRUMS AS A SUBSTITUTE FOR TYPE C (STEADY BURN) WARNING LIGHTS

1. A warning reflector or approved substitute may be mounted on a plastic drum as a substitute for a Type C, steady burn warning light at the discretion of the Contractor unless otherwise noted in the plans.
2. The warning reflector shall be yellow in color and shall be manufactured using a sign substrate approved for use with plastic drums listed on the CWZTCD.
3. The warning reflector shall have a minimum retroreflective surface area (one-side) of 30 square inches.
4. Round reflectors shall be fully reflectorized, including the area where attached to the drum.
5. Square substrates must have a minimum of 30 square inches of reflectorized sheeting. They do not have to be reflectorized where it attaches to the drum.
6. The side of the warning reflector facing approaching traffic shall have sheeting meeting the color and retroreflectivity requirements for DMS 8300-Type B or Type C.
7. When used near two-way traffic, both sides of the warning reflector shall be reflectorized.
8. The warning reflector should be mounted on the side of the handle nearest approaching traffic.
9. The maximum spacing for warning reflectors should be identical to the channelizing device spacing requirements.

Arrow Boards may be located behind channelizing devices in place for a shoulder taper or merging taper, otherwise they shall be delineated with four (4) channelizing devices placed perpendicular to traffic on the upstream side of traffic.

1. The Flashing Arrow Board should be used for all lane closures on multi-lane roadways, or slow moving maintenance or construction activities on the travel lanes.
2. Flashing Arrow Boards should not be used on two-lane, two-way roadways, detours, diversions or work on shoulders unless the "CAUTION" display (see detail below) is used.
3. The Engineer/Inspector shall choose all appropriate signs, barricades and/or other traffic control devices that should be used in conjunction with the Flashing Arrow Board.
4. The Flashing Arrow Board should be able to display the following symbols:

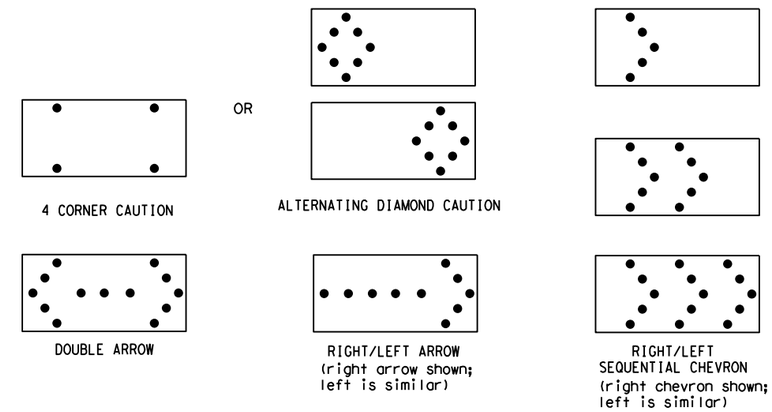

5. The "CAUTION" display consists of four corner lamps flashing simultaneously, or the Alternating Diamond Caution mode as shown.
6. The straight line caution display is NOT ALLOWED.
7. The Flashing Arrow Board shall be capable of minimum 50 percent dimming from rated lamp voltage. The flashing rate of the lamps shall not be less than 25 nor more than 40 flashes per minute.
8. Minimum lamp "on time" shall be approximately 50 percent for the flashing arrow and equal intervals of 25 percent for each sequential phase of the flashing chevron.
9. The sequential arrow display is NOT ALLOWED.
10. The flashing arrow display is the TxDOT standard; however, the sequential chevron display may be used during daylight operations.
11. The Flashing Arrow Board shall be mounted on a vehicle, trailer or other suitable support.
12. A Flashing Arrow Board SHALL NOT BE USED to laterally shift traffic.
13. A full matrix PCMS may be used to simulate a Flashing Arrow Board provided it meets visibility, flash rate and dimming requirements on this sheet for the same size arrow.
14. Minimum mounting height of trailer mounted Arrow Boards should be 7 feet from roadway to bottom of panel.

REQUIREMENTS

TYPE	MINIMUM SIZE	MINIMUM NUMBER OF PANEL LAMPS	MINIMUM VISIBILITY DISTANCE
B	30 x 60	13	3/4 mile
C	48 x 96	15	1 mile

ATTENTION

Flashing Arrow Boards shall be equipped with automatic dimming devices.

WHEN NOT IN USE, REMOVE THE ARROW BOARD FROM THE RIGHT-OF-WAY OR PLACE THE ARROW BOARD BEHIND CONCRETE TRAFFIC BARRIER OR GUARDRAIL.

FLASHING ARROW BOARDS

TRUCK-MOUNTED ATTENUATORS

1. Truck-mounted attenuators (TMA) used on TxDOT facilities must meet the requirements outlined in the Manual for Assessing Safety Hardware (MASH).
2. Refer to the CWZTCD for the requirements of Level 2 or Level 3 TMAs.
3. Refer to the CWZTCD for a list of approved TMAs.
4. TMAs are required on freeways unless otherwise noted in the plans.
5. A TMA should be used anytime that it can be positioned 30 to 100 feet in advance of the area of crew exposure without adversely affecting the work performance.
6. The only reason a TMA should not be required is when a work area is spread down the roadway and the work crew is an extended distance from the TMA.

Texas Department of Transportation — Traffic Safety Division Standard

BARRICADE AND CONSTRUCTION ARROW PANEL, REFLECTORS, WARNING LIGHTS & ATTENUATOR

BC(7)-21

FILE: bc-21.dgn	DN: TxDOT	CK: TxDOT	DW: TxDOT	CK: TxDOT
© TxDOT November 2002	CONT	SECT	JOB	HIGHWAY
REVISIONS 9-07 8-14, 7-13 5-21	DIST		COUNTY	SHEET NO.

DISCLAIMER:
The use of this standard is governed by the "Texas Engineering Practice Act". No warranty of any kind is made by TxDOT for any purpose whatsoever. TxDOT assumes no responsibility for the conversion of this standard to other formats or for incorrect results or damages resulting from its use.

DATE:
FILE:

DISCLAIMER:
The use of this standard is governed by the "Texas Engineering Practice Act". No warranty of any kind is made by TxDOT for any purpose whatsoever. TxDOT assumes no responsibility for the conversion of this standard to other formats or for incorrect results or damages resulting from its use.

GENERAL NOTES

1. For long term stationary work zones on freeways, drums shall be used as the primary channelizing device.
2. For intermediate term stationary work zones on freeways, drums should be used as the primary channelizing device but may be replaced in tangent sections by vertical panels, or 42" two-piece cones. In tangent sections, one-piece cones may be used with the approval of the Engineer but only if personnel are present on the project at all times to maintain the cones in proper position and location.
3. For short term stationary work zones on freeways, drums are the preferred channelizing device but may be replaced in tapers, transitions and tangent sections by vertical panels, two-piece cones or one-piece cones as approved by the Engineer.
4. Drums and all related items shall comply with the requirements of the current version of the "Texas Manual on Uniform Traffic Control Devices" (TMUTCD) and the "Compliant Work Zone Traffic Control Devices List" (CWZTCD).
5. Drums, bases, and related materials shall exhibit good workmanship and shall be free from objectionable marks or defects that would adversely affect their appearance or serviceability.
6. The Contractor shall have a maximum of 24 hours to replace any plastic drums identified for replacement by the Engineer/Inspector. The replacement device must be an approved device.

GENERAL DESIGN REQUIREMENTS

Pre-qualified plastic drums shall meet the following requirements:

1. Plastic drums shall be a two-piece design; the "body" of the drum shall be the top portion and the "base" shall be the bottom.
2. The body and base shall lock together in such a manner that the body separates from the base when impacted by a vehicle traveling at a speed of 20 MPH or greater but prevents accidental separation due to normal handling and/or air turbulence created by passing vehicles.
3. Plastic drums shall be constructed of lightweight flexible, and deformable materials. The Contractor shall NOT use metal drums or single piece plastic drums as channelization devices or sign supports.
4. Drums shall present a profile that is a minimum of 18 inches in width at the 36 inch height when viewed from any direction. The height of drum unit (body installed on base) shall be a minimum of 36 inches and a maximum of 42 inches.
5. The top of the drum shall have a built-in handle for easy pickup and shall be designed to drain water and not collect debris. The handle shall have a minimum of two widely spaced 9/16 inch diameter holes to allow attachment of a warning light, warning reflector unit or approved compliant sign.
6. The exterior of the drum body shall have a minimum of four alternating orange and white retroreflective circumferential stripes not less than 4 inches nor greater than 8 inches in width. Any non-reflectorized space between any two adjacent stripes shall not exceed 2 inches in width.
7. Bases shall have a maximum width of 36 inches, a maximum height of 4 inches, and a minimum of two footholds of sufficient size to allow base to be held down while separating the drum body from the base.
8. Plastic drums shall be constructed of ultra-violet stabilized, orange, high-density polyethylene (HDPE) or other approved material.
9. Drum body shall have a maximum unballasted weight of 11 lbs.
10. Drum and base shall be marked with manufacturer's name and model number.

RETROREFLECTIVE SHEETING

1. The stripes used on drums shall be constructed of sheeting meeting the color and retroreflectivity requirements of Departmental Materials Specification DMS-8300, "Sign Face Materials." Type A or Type B reflective sheeting shall be supplied unless otherwise specified in the plans.
2. The sheeting shall be suitable for use on and shall adhere to the drum surface such that, upon vehicular impact, the sheeting shall remain adhered in-place and exhibit no delaminating, cracking, or loss of retroreflectivity other than that loss due to abrasion of the sheeting surface.

BALLAST

1. Unballasted bases shall be large enough to hold up to 50 lbs. of sand. This base, when filled with the ballast material, should weigh between 35 lbs (minimum) and 50 lbs (maximum). The ballast may be sand in one to three sandbags separate from the base, sand in a sand-filled plastic base, or other ballasting devices as approved by the Engineer. Stacking of sandbags will be allowed, however height of sandbags above pavement surface may not exceed 12 inches.
2. Bases with built-in ballast shall weigh between 40 lbs. and 50 lbs. Built-in ballast can be constructed of an integral crumb rubber base or a solid rubber base.
3. Recycled truck tire sidewalls may be used for ballast on drums approved for this type of ballast on the CWZTCD list.
4. The ballast shall not be heavy objects, water, or any material that would become hazardous to motorists, pedestrians, or workers when the drum is struck by a vehicle.
5. When used in regions susceptible to freezing, drums shall have drainage holes in the bottoms so that water will not collect and freeze becoming a hazard when struck by a vehicle.
6. Ballast shall not be placed on top of drums.
7. Adhesives may be used to secure base of drums to pavement.

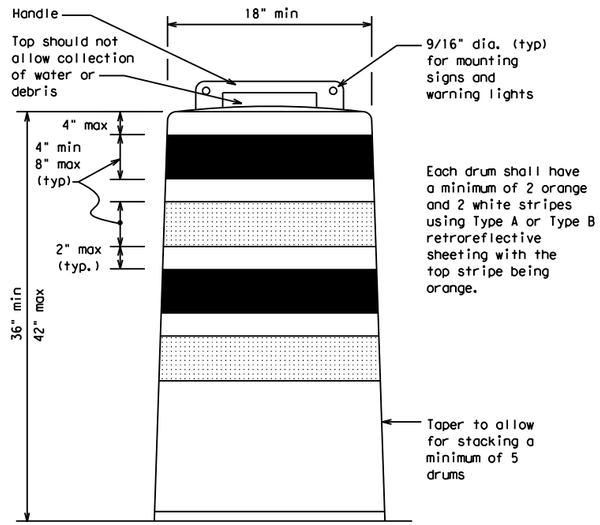

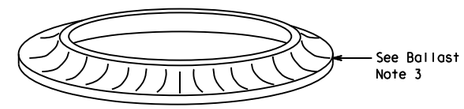

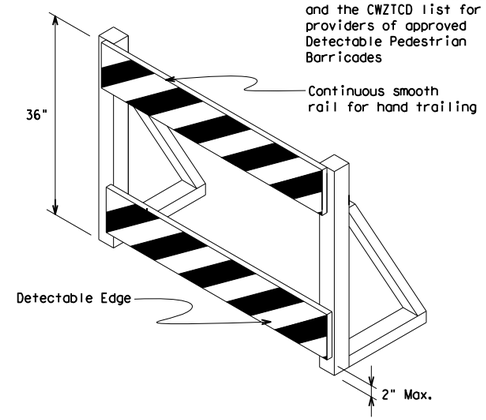

DETECTABLE PEDESTRIAN BARRICADES

1. When existing pedestrian facilities are disrupted, closed, or relocated in a TTC zone, the temporary facilities shall be detectable and include accessibility features consistent with the features present in the existing pedestrian facility. Refer to WZ(BTS-2) for Pedestrian Control requirements for Sidewalk Diversions, Sidewalk Detours and Crosswalk Closures.
2. Where pedestrians with visual disabilities normally use the closed sidewalk, a Detectable Pedestrian Barricade shall be placed across the full width of the closed sidewalk instead of a Type 3 Barricade.
3. Detectable pedestrian barricades similar to the one pictured above, longitudinal channelizing devices, some concrete barriers, and wood or chain link fencing with a continuous detectable edging can satisfactorily delineate a pedestrian path.
4. Tape, rope, or plastic chain strung between devices are not detectable, do not comply with the design standards in the "Americans with Disabilities Act Accessibility Guidelines (ADAAG)" and should not be used as a control for pedestrian movements.
5. Warning lights shall not be attached to detectable pedestrian barricades.
6. Detectable pedestrian barricades should use 8" nominal barricade rails as shown on BC(10) provided that the top rail provides a smooth continuous rail suitable for hand trailing with no splinters, burrs, or sharp edges.

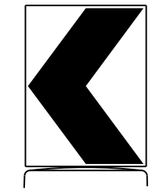

18" x 24" Sign
(Maximum Sign Dimension)
Chevron CW1-8, Opposing Traffic Lane Divider, Driveway sign D70a, Keep Right R4 series or other signs as approved by Engineer

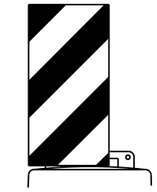

12" x 24"
Vertical Panel
mount with diagonals sloping down towards travel way

Plywood, Aluminum or Metal sign substrates shall NOT be used on plastic drums

SIGNS, CHEVRONS, AND VERTICAL PANELS MOUNTED ON PLASTIC DRUMS

1. Signs used on plastic drums shall be manufactured using substrates listed on the CWZTCD.
2. Chevrons and other work zone signs with an orange background shall be manufactured with Type B_{FL} or Type C_{FL} Orange sheeting meeting the color and retroreflectivity requirements of DMS-8300, "Sign Face Material," unless otherwise specified in the plans.
3. Vertical Panels shall be manufactured with orange and white sheeting meeting the requirements of DMS-8300 Type A or Type B. Diagonal stripes on Vertical Panels shall slope down toward the intended traveled lane.
4. Other sign messages (text or symbolic) may be used as approved by the Engineer. Sign dimensions shall not exceed 18 inches in width or 24 inches in height, except for the R9 series signs discussed in note 8 below.
5. Signs shall be installed using a 1/2 inch bolt (nominal) and nut, two washers, and one locking washer for each connection.
6. Mounting bolts and nuts shall be fully engaged and adequately torqued. Bolts should not extend more than 1/2 inch beyond nuts.
7. Chevrons may be placed on drums on the outside of curves, on merging tapers or on shifting tapers. When used in these locations, they may be placed on every drum or spaced not more than on every third drum. A minimum of three (3) should be used at each location called for in the plans.
8. R9-9, R9-10, R9-11 and R9-11a Sidewalk Closed signs which are 24 inches wide may be mounted on plastic drums, with approval of the Engineer.

Texas Department of Transportation

Traffic Safety Division Standard

BARRICADE AND CONSTRUCTION CHANNELIZING DEVICES

BC(8)-21

FILE: bc-21.dgn	DN: TxDOT	CK: TxDOT	DW: TxDOT	CK: TxDOT
©TxDOT November 2002	CONT	SECT	JOB	HIGHWAY
REVISIONS 4-03 8-14, 9-07 5-21, 7-13	DIST		COUNTY	SHEET NO.

DATE:
FILE:

DISCLAIMER:
The use of this standard is governed by the "Texas Engineering Practice Act". No warranty of any kind is made by TxDOT for any purpose whatsoever. TxDOT assumes no responsibility for the conversion of this standard to other formats or for incorrect results or damages resulting from its use.

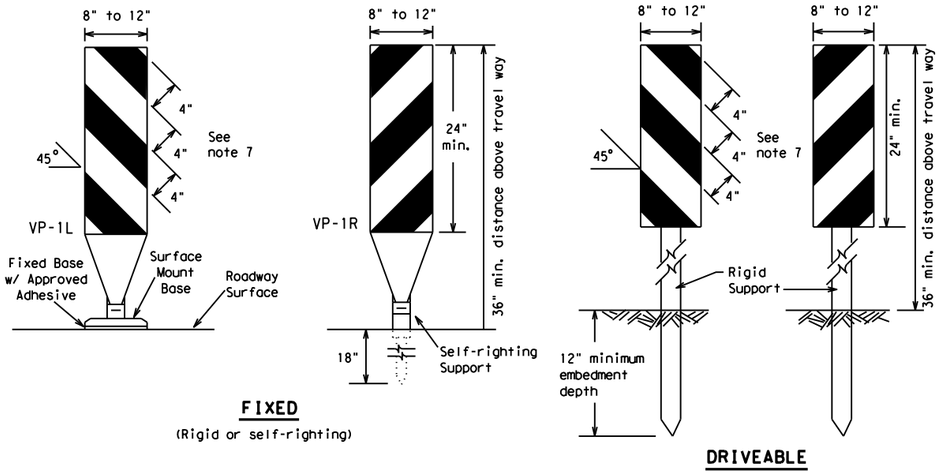

FIXED

(Rigid or self-righting)

DRIVEABLE

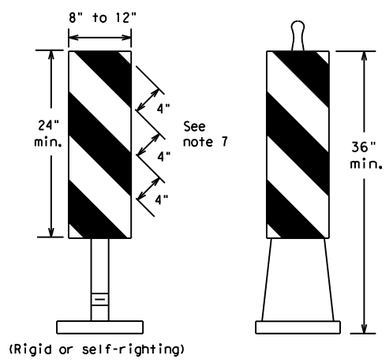

(Rigid or self-righting)

PORTABLE

1. Vertical Panels (VP's) are normally used to channelize traffic or divide opposing lanes of traffic.
2. VP's may be used in daytime or nighttime situations. They may be used at the edge of shoulder drop-offs and other areas such as lane transitions where positive daytime and nighttime delineation is required. The Engineer/Inspector shall refer to the Roadway Design Manual for additional requirements on the use VP's for drop-offs.
3. VP's should be mounted back to back if used at the edge of cuts adjacent to two-way two lane roadways. Stripes are to be reflective orange and reflective white and should always slope downward toward the travel lane.
4. VP's used on expressways and freeways or other high speed roadways, may have more than 270 square inches of retroreflective area facing traffic.
5. Self-righting supports are available with portable base. See "Compliant Work Zone Traffic Control Devices List" (CWZTCD).
6. Sheeting for the VP's shall be retroreflective Type A or Type B conforming to Departmental Material Specification DMS-8300, unless noted otherwise.
7. Where the height of reflective material on the vertical panel is 36 inches or greater, a panel stripe of 6 inches shall be used.

VERTICAL PANELS (VPs)

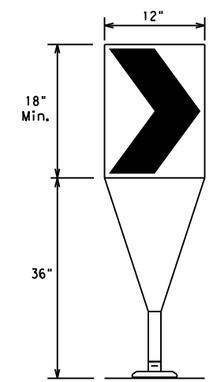

Fixed Base w/ Approved Adhesive (Driveable Base, or Flexible Support can be used)

1. The chevron shall be a vertical rectangle with a minimum size of 12 by 18 inches.
2. Chevrons are intended to give notice of a sharp change of alignment with the direction of travel and provide additional emphasis and guidance for vehicle operators with regard to changes in horizontal alignment of the roadway.
3. Chevrons, when used, shall be erected on the outside of a sharp curve or turn, or on the far side of an intersection. They shall be in line with and at right angles to approaching traffic. Spacing should be such that the motorist always has three in view, until the change in alignment eliminates its need.
4. To be effective, the chevron should be visible for at least 500 feet.
5. Chevrons shall be orange with a black nonreflective legend. Sheeting for the chevron shall be retroreflective Type B_{FL} or Type C_{FL} conforming to Departmental Material Specification DMS-8300, unless noted otherwise. The legend shall meet the requirements of DMS-8300.
6. For Long Term Stationary use on tapers or transitions on freeways and divided highways, self-righting chevrons may be used to supplement plastic drums but not to replace plastic drums.

CHEVRONS

GENERAL NOTES

1. Work Zone channelizing devices illustrated on this sheet may be installed in close proximity to traffic and are suitable for use on high or low speed roadways. The Engineer/Inspector shall ensure that spacing and placement is uniform and in accordance with the "Texas Manual on Uniform Traffic Control Devices" (TMUTCD).
2. Channelizing devices shown on this sheet may have a driveable, fixed or portable base. The requirement for self-righting channelizing devices must be specified in the General Notes or other plan sheets.
3. Channelizing devices on self-righting supports should be used in work zone areas where channelizing devices are frequently impacted by errant vehicles or vehicle related wind gusts making alignment of the channelizing devices difficult to maintain. Locations of these devices shall be detailed elsewhere in the plans. These devices shall conform to the TMUTCD and the "Compliant Work Zone Traffic Control Devices List" (CWZTCD).
4. The Contractor shall maintain devices in a clean condition and replace damaged, nonreflective, faded, or broken devices and bases as required by the Engineer/Inspector. The Contractor shall be required to maintain proper device spacing and alignment.
5. Portable bases shall be fabricated from virgin and/or recycled rubber. The portable bases shall weigh a minimum of 30 lbs.
6. Pavement surfaces shall be prepared in a manner that ensures proper bonding between the adhesives, the fixed mount bases and the pavement surface. Adhesives shall be prepared and applied according to the manufacturer's recommendations.
7. The installation and removal of channelizing devices shall not cause detrimental effects to the final pavement surfaces, including pavement surface discoloration or surface integrity. Driveable bases shall not be permitted on final pavement surfaces. The Engineer/Inspector shall approve all application and removal procedures of fixed bases.

1. Opposing Traffic Lane Dividers (OTLD) are delineation devices designed to convert a normal one-way roadway section to two-way operation. OTLD's are used on temporary centerlines. The upward and downward arrows on the sign's face indicate the direction of traffic on either side of the divider. The base is secured to the pavement with an adhesive or rubber weight to minimize movement caused by a vehicle impact or wind gust.
2. The OTLD may be used in combination with 42" cones or VPs.
3. Spacing between the OTLD shall not exceed 500 feet. 42" cones or VPs placed between the OTLD's should not exceed 100 foot spacing.
4. The OTLD shall be orange with a black nonreflective legend. Sheeting for the OTLD shall be retroreflective Type B_{FL} or Type C_{FL} conforming to Departmental Material Specification DMS-8300, unless noted otherwise. The legend shall meet the requirements of DMS-8300.

OPPOSING TRAFFIC LANE DIVIDERS (OTLD)

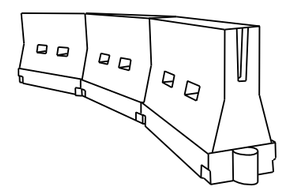

LONGITUDINAL CHANNELIZING DEVICES (LCD)

1. LCDs are crashworthy, lightweight, deformable devices that are highly visible, have good target value and can be connected together. They are not designed to contain or redirect a vehicle on impact.
2. LCDs may be used instead of a line of cones or drums.
3. LCDs shall be placed in accordance to application and installation requirements specific to the device, and used only when shown on the CWZTCD list.
4. LCDs should not be used to provide positive protection for obstacles, pedestrians or workers.
5. LCDs shall be supplemented with retroreflective delineation as required for temporary barriers on BC(7) when placed roughly parallel to the travel lanes.
6. LCDs used as barricades placed perpendicular to traffic should have at least one row of reflective sheeting meeting the requirements for barricade rails as shown on BC(10). Place reflective sheeting near the top of the LCD along the full length of the device.

WATER BALLASTED SYSTEMS USED AS BARRIERS

1. Water ballasted systems used as barriers shall not be used solely to channelize road users, but also to protect the work space per the appropriate Manual for Assessing Safety Hardware (MASH) crashworthiness requirements based on roadway speed and barrier application.
2. Water ballasted systems used to channelize vehicular traffic shall be supplemented with retroreflective delineation or channelizing devices to improve daytime/nighttime visibility. They may also be supplemented with pavement markings.
3. Water ballasted systems used as barriers shall be placed in accordance to application and installation requirements specific to the device, and used only when shown on the CWZTCD list.
4. Water ballasted systems used as barriers should not be used for a merging taper except in low speed (less than 45 MPH) urban areas. When used on a taper in a low speed urban area, the taper shall be delineated and the taper length should be designed to optimize road user operations considering the available geometric conditions.
5. When water ballasted systems used as barriers have blunt ends exposed to traffic, they should be attenuated as per manufacturer recommendations or flared to a point outside the clear zone.

If used to channelize pedestrians, longitudinal channelizing devices or water ballasted systems must have a continuous detectable bottom for users of long canes and the top of the unit shall not be less than 32 inches in height.

HOLLOW OR WATER BALLASTED SYSTEMS USED AS LONGITUDINAL CHANNELIZING DEVICES OR BARRIERS

Posted Speed	Formula	Minimum Desirable Taper Lengths **			Suggested Maximum Spacing of Channelizing Devices	
		10' Offset	11' Offset	12' Offset	On a Taper	On a Tangent
30	$L = \frac{WS^2}{60}$	150'	165'	180'	30'	60'
35		205'	225'	245'	35'	70'
40		265'	295'	320'	40'	80'
45	L = WS	450'	495'	540'	45'	90'
50		500'	550'	600'	50'	100'
55		550'	605'	660'	55'	110'
60		600'	660'	720'	60'	120'
65		650'	715'	780'	65'	130'
70		700'	770'	840'	70'	140'
75		750'	825'	900'	75'	150'
80		800'	880'	960'	80'	160'

** Taper lengths have been rounded off.
L=Length of Taper (FT.) W=Width of Offset (FT.)
S=Posted Speed (MPH)

SUGGESTED MAXIMUM SPACING OF CHANNELIZING DEVICES AND MINIMUM DESIRABLE TAPER LENGTHS

Texas Department of Transportation — Traffic Safety Division Standard

BARRICADE AND CONSTRUCTION CHANNELIZING DEVICES

BC(9)-21

FILE: bc-21.dgn	DN: TxDOT	CK: TxDOT	DW: TxDOT	CK: TxDOT
© TxDOT November 2002	CONT	SECT	JOB	HIGHWAY
REVISIONS 9-07 8-14 7-13 5-21	DIST	COUNTY		SHEET NO.

DATE:
FILE:

DISCLAIMER:
The use of this standard is governed by the "Texas Engineering Practice Act". No warranty of any kind is made by TxDOT for any purpose whatsoever. TxDOT assumes no responsibility for the conversion of this standard to other formats or for incorrect results or damages resulting from its use.

TYPE 3 BARRICADES

1. Refer to the Compliant Work Zone Traffic Control Devices List (CWZTCD) for details of the Type 3 Barricades and a list of all materials used in the construction of Type 3 Barricades.
2. Type 3 Barricades shall be used at each end of construction projects closed to all traffic.
3. Barricades extending across a roadway should have stripes that slope downward in the direction toward which traffic must turn in detouring. When both right and left turns are provided, the chevron striping may slope downward in both directions from the center of the barricade. Where no turns are provided at a closed road, striping should slope downward in both directions toward the center of roadway.
4. Striping of rails, for the right side of the roadway, should slope downward to the left. For the left side of the roadway, striping should slope downward to the right.
5. Identification markings may be shown only on the back of the barricade rails. The maximum height of letters and/or company logos used for identification shall be 1".
6. Barricades shall not be placed parallel to traffic unless an adequate clear zone is provided.
7. Warning lights shall NOT be installed on barricades.
8. Where barricades require the use of weights to keep from turning over, the use of sandbags with dry, cohesionless sand is recommended. The sandbags will be tied shut to keep the sand from spilling and to maintain a constant weight. Sand bags shall not be stacked in a manner that covers any portion of a barricade rails reflective sheeting. Rock, concrete, iron, steel or other solid objects will NOT be permitted. Sandbags should weigh a minimum of 35 lbs and a maximum of 50 lbs. Sandbags shall be made of a durable material that tears upon vehicular impact. Rubber (such as tire inner tubes) shall not be used for sandbags. Sandbags shall only be placed along or upon the base supports of the device and shall not be suspended above ground level or hung with rope, wire, chains or other fasteners.
9. Sheeting for barricades shall be retroreflective Type A or Type B conforming to Departmental Material Specification DMS-8300 unless otherwise noted.

Barricades shall NOT be used as a sign support.

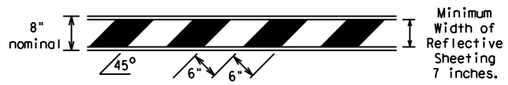

TYPICAL STRIPING DETAIL FOR BARRICADE RAIL

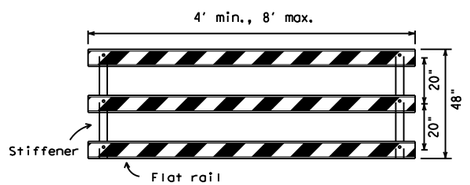

Stiffener may be inside or outside of support, but no more than 2 stiffeners shall be allowed on one barricade.

TYPICAL PANEL DETAIL FOR SKID OR POST TYPE BARRICADES

Each roadway of a divided highway shall be barricaded in the same manner.

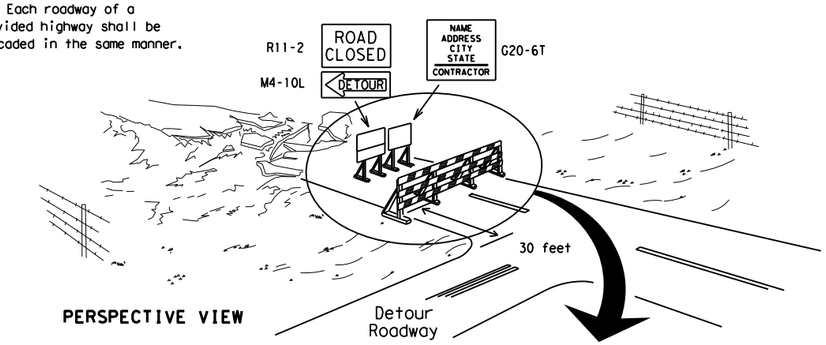

PERSPECTIVE VIEW

The three rails on Type 3 barricades shall be reflectorized orange and reflective white stripes on one side facing one-way traffic and both sides for two-way traffic.
Barricade striping should slant downward in the direction of detour.

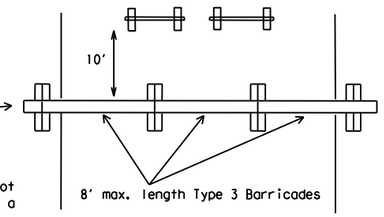

PLAN VIEW

1. Signs should be mounted on independent supports at a 7 foot mounting height in center of roadway. The signs should be a minimum of 10 feet behind Type 3 Barricades.
2. Advance signing shall be as specified elsewhere in the plans.

TYPE 3 BARRICADE (POST AND SKID) TYPICAL APPLICATION

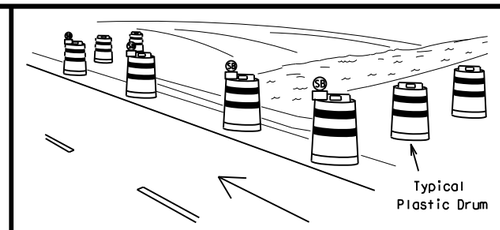

PERSPECTIVE VIEW

1. Where positive redirectional capability is provided, drums may be omitted.
2. Plastic construction fencing may be used with drums for safety as required in the plans.
3. Vertical Panels on flexible support may be substituted for drums when the shoulder width is less than 4 feet.
4. When the shoulder width is greater than 12 feet, steady-burn lights may be omitted if drums are used.
5. Drums must extend the length of the culvert widening.

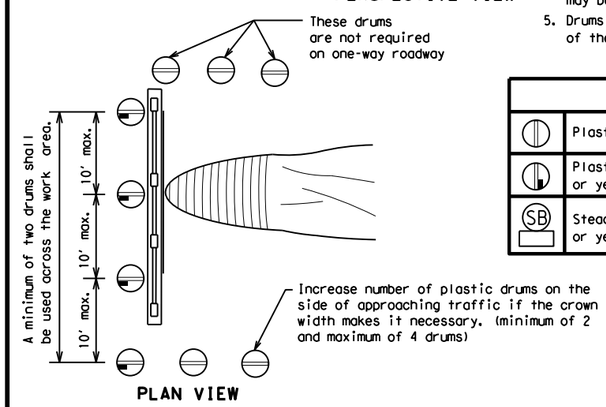

PLAN VIEW

LEGEND	
	Plastic drum
	Plastic drum with steady burn light or yellow warning reflector
SB	Steady burn warning light or yellow warning reflector

CULVERT WIDENING OR OTHER ISOLATED WORK WITHIN THE PROJECT LIMITS

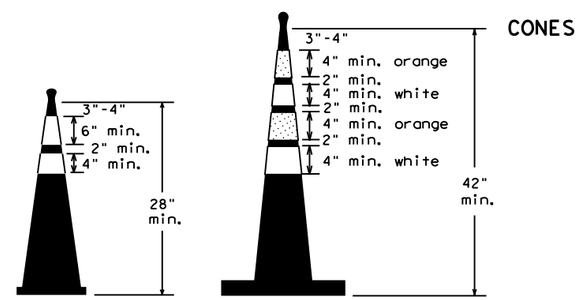

Two-Piece cones

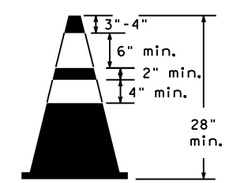

One-Piece cones

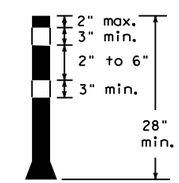

Tubular Marker

28" Cones shall have a minimum weight of 9 1/2 lbs.

42" 2-piece cones shall have a minimum weight of 30 lbs. including base.

1. Traffic cones and tubular markers shall be predominantly orange, and meet the height and weight requirements shown above.
2. One-piece cones have the body and base of the cone molded in one consolidated unit. Two-piece cones have a cone shaped body and a separate rubber base, or ballast, that is added to keep the device upright and in place.
3. Two-piece cones may have a handle or loop extending up to 8" above the minimum height shown, in order to aid in retrieving the device.
4. Cones or tubular markers shall have white or white and orange reflective bands as shown above. The reflective bands shall have a smooth, sealed outer surface and meet the requirements of Departmental Material Specification DMS-8300 Type A or Type B.
5. 28" cones and tubular markers are generally suitable for short duration and short-term stationary work as defined on BC(4). These should not be used for intermediate-term or long-term stationary work unless personnel is on-site to maintain them in their proper upright position.
6. 42" two-piece cones, vertical panels or drums are suitable for all work zone durations.
7. Cones or tubular markers used on each project should be of the same size and shape.

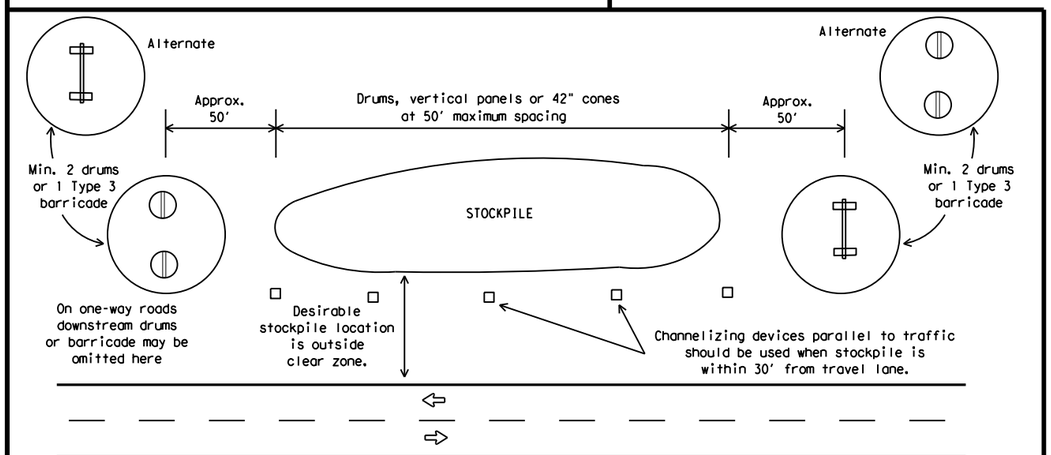

TRAFFIC CONTROL FOR MATERIAL STOCKPILES

SHEET 10 OF 12

Texas Department of Transportation — Traffic Safety Division Standard

BARRICADE AND CONSTRUCTION CHANNELIZING DEVICES

BC(10)-21

FILE: bc-21.dgn	DN: TxDOT	CK: TxDOT	DW: TxDOT	CK: TxDOT
© TxDOT November 2002	CONT	SECT	JOB	HIGHWAY
REVISIONS 9-07 8-14, 7-13 5-21	DIST		COUNTY	SHEET NO.

DATE:
FILE:

DISCLAIMER:
The use of this standard is governed by the "Texas Engineering Practice Act". No warranty of any kind is made by TxDOT for any purpose whatsoever. TxDOT assumes no responsibility for the conversion of this standard to other formats or for incorrect results or damages resulting from its use.

WORK ZONE PAVEMENT MARKINGS

GENERAL

1. The Contractor shall be responsible for maintaining work zone and existing pavement markings, in accordance with the standard specifications and special provisions, on all roadways open to traffic within the CSJ limits unless otherwise stated in the plans.
2. Color, patterns and dimensions shall be in conformance with the "Texas Manual on Uniform Traffic Control Devices" (TMUTCD).
3. Additional supplemental pavement marking details may be found in the plans or specifications.
4. Pavement markings shall be installed in accordance with the TMUTCD and as shown on the plans.
5. When short term markings are required on the plans, short term markings shall conform with the TMUTCD, the plans and details as shown on the Standard Plan Sheet WZ(STPM).
6. When standard pavement markings are not in place and the roadway is opened to traffic, DO NOT PASS signs shall be erected to mark the beginning of the sections where passing is prohibited and PASS WITH CARE signs at the beginning of sections where passing is permitted.
7. All work zone pavement markings shall be installed in accordance with Item 662, "Work Zone Pavement Markings."

RAISED PAVEMENT MARKERS

1. Raised pavement markers are to be placed according to the patterns on BC(12).
2. All raised pavement markers used for work zone markings shall meet the requirements of Item 672, "RAISED PAVEMENT MARKERS" and Departmental Material Specification DMS-4200 or DMS-4300.

PREFABRICATED PAVEMENT MARKINGS

1. Removable prefabricated pavement markings shall meet the requirements of DMS-8241.
2. Non-removable prefabricated pavement markings (foil back) shall meet the requirements of DMS-8240.

MAINTAINING WORK ZONE PAVEMENT MARKINGS

1. The Contractor will be responsible for maintaining work zone pavement markings within the work limits.
2. Work zone pavement markings shall be inspected in accordance with the frequency and reporting requirements of work zone traffic control device inspections as required by Form 599.
3. The markings should provide a visible reference for a minimum distance of 300 feet during normal daylight hours and 160 feet when illuminated by automobile low-beam headlights at night, unless sight distance is restricted by roadway geometrics.
4. Markings failing to meet this criteria within the first 30 days after placement shall be replaced at the expense of the Contractor as per Specification Item 662.

REMOVAL OF PAVEMENT MARKINGS

1. Pavement markings that are no longer applicable, could create confusion or direct a motorist toward or into the closed portion of the roadway shall be removed or obliterated before the roadway is opened to traffic.
2. The above shall not apply to detours in place for less than three days, where flaggers and/or sufficient channelizing devices are used in lieu of markings to outline the detour route.
3. Pavement markings shall be removed to the fullest extent possible, so as not to leave a discernable marking. This shall be by any method approved by TxDOT Specification Item 677 for "Eliminating Existing Pavement Markings and Markers".
4. The removal of pavement markings may require resurfacing or seal coating portions of the roadway as described in Item 677.
5. Subject to the approval of the Engineer, any method that proves to be successful on a particular type pavement may be used.
6. Blast cleaning may be used but will not be required unless specifically shown in the plans.
7. Over-painting of the markings SHALL NOT BE permitted.
8. Removal of raised pavement markers shall be as directed by the Engineer.
9. Removal of existing pavement markings and markers will be paid for directly in accordance with Item 677, "ELIMINATING EXISTING PAVEMENT MARKINGS AND MARKERS," unless otherwise stated in the plans.
10. Black-out marking tape may be used to cover conflicting existing markings for periods less than two weeks when approved by the Engineer.

Temporary Flexible-Reflective Roadway Marker Tabs

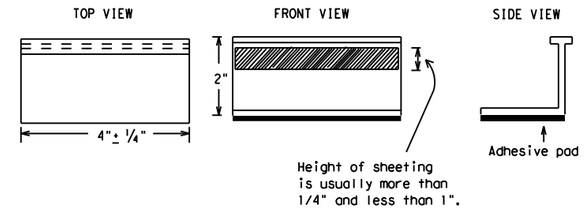

STAPLES OR NAILS SHALL NOT BE USED TO SECURE TEMPORARY FLEXIBLE-REFLECTIVE ROADWAY MARKER TABS TO THE PAVEMENT SURFACE

1. Temporary flexible-reflective roadway marker tabs used as guidemarks shall meet the requirements of DMS-8242.
2. Tabs detailed on this sheet are to be inspected and accepted by the Engineer or designated representative. Sampling and testing is not normally required, however at the option of the Engineer, either "A" or "B" below may be imposed to assure quality before placement on the roadway.
   A. Select five (5) or more tabs at random from each lot or shipment and submit to the Construction Division, Materials and Pavement Section to determine specification compliance.
   B. Select five (5) tabs and perform the following test. Affix five (5) tabs at 24 inch intervals on an asphaltic pavement in a straight line. Using a medium size passenger vehicle or pickup, run over the markers with the front and rear tires at a speed of 35 to 40 miles per hour, four (4) times in each direction. No more than one (1) out of the five (5) reflective surfaces shall be lost or displaced as a result of this test.
3. Small design variances may be noted between tab manufacturers.
4. See Standard Sheet WZ(STPM) for tab placement on new pavements. See Standard Sheet TCP(7-1) for tab placement on seal coat work.

RAISED PAVEMENT MARKERS USED AS GUIDEMARKS

1. Raised pavement markers used as guidemarks shall be from the approved product list, and meet the requirements of DMS-4200.
2. All temporary construction raised pavement markers provided on a project shall be of the same manufacturer.
3. Adhesive for guidemarks shall be bituminous material hot applied or butyl rubber pad for all surfaces, or thermoplastic for concrete surfaces.

Guidemarks shall be designated as:
YELLOW - (two amber reflective surfaces with yellow body).
WHITE - (one silver reflective surface with white body).

DEPARTMENTAL MATERIAL SPECIFICATIONS	
PAVEMENT MARKERS (REFLECTORIZED)	DMS-4200
TRAFFIC BUTTONS	DMS-4300
EPOXY AND ADHESIVES	DMS-6100
BITUMINOUS ADHESIVE FOR PAVEMENT MARKERS	DMS-6130
PERMANENT PREFABRICATED PAVEMENT MARKINGS	DMS-8240
TEMPORARY REMOVABLE, PREFABRICATED PAVEMENT MARKINGS	DMS-8241
TEMPORARY FLEXIBLE, REFLECTIVE ROADWAY MARKER TABS	DMS-8242

A list of prequalified reflective raised pavement markers, non-reflective traffic buttons, roadway marker tabs and other pavement markings can be found at the Material Producer List web address shown on BC(1).

Texas Department of Transportation — Traffic Safety Division Standard

BARRICADE AND CONSTRUCTION PAVEMENT MARKINGS

BC(11)-21

FILE: bc-21.dgn	DN: TxDOT	CK: TxDOT	DW: TxDOT	CK: TxDOT
© TxDOT February 1998	CONT	SECT	JOB	HIGHWAY
REVISIONS 2-98 9-07 5-21 1-02 7-13 11-02 8-14	DIST		COUNTY	SHEET NO.
105				

DATE:
FILE:

PAVEMENT MARKING PATTERNS

REFLECTORIZED PAVEMENT MARKINGS - PATTERN A

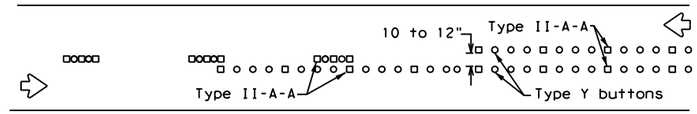

RAISED PAVEMENT MARKERS - PATTERN A

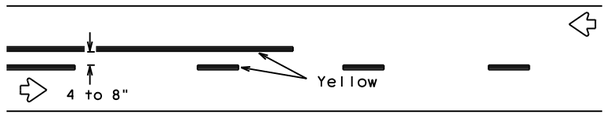

REFLECTORIZED PAVEMENT MARKINGS - PATTERN B

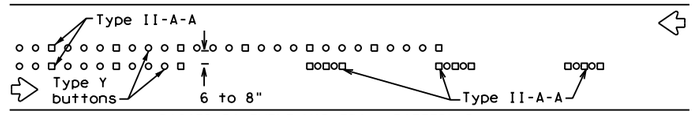

RAISED PAVEMENT MARKERS - PATTERN B

Pattern A is the TXDOT Standard, however Pattern B may be used if approved by the Engineer.
Prefabricated markings may be substituted for reflectorized pavement markings.

CENTER LINE & NO-PASSING ZONE BARRIER LINES FOR TWO-LANE, TWO-WAY HIGHWAYS

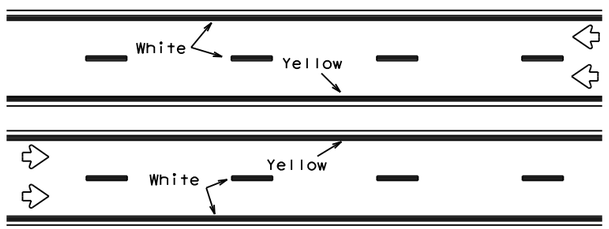

REFLECTORIZED PAVEMENT MARKINGS

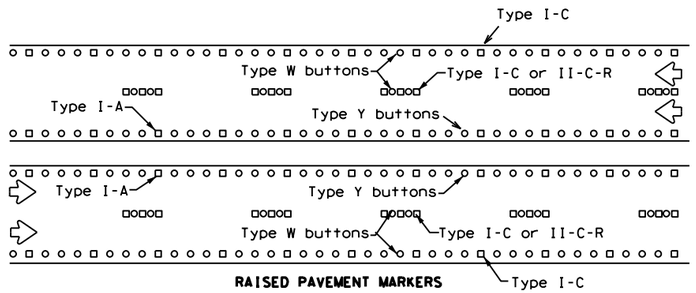

RAISED PAVEMENT MARKERS

Prefabricated markings may be substituted for reflectorized pavement markings.

EDGE & LANE LINES FOR DIVIDED HIGHWAY

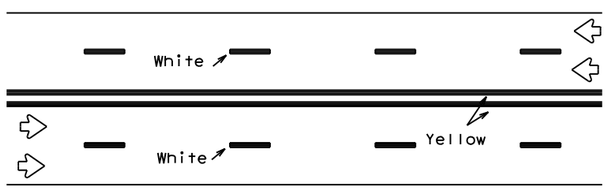

REFLECTORIZED PAVEMENT MARKINGS

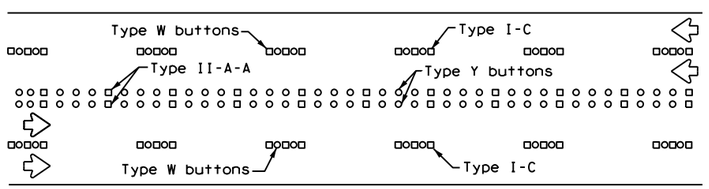

RAISED PAVEMENT MARKERS

Prefabricated markings may be substituted for reflectorized pavement markings.

LANE & CENTER LINES FOR MULTILANE UNDIVIDED HIGHWAYS

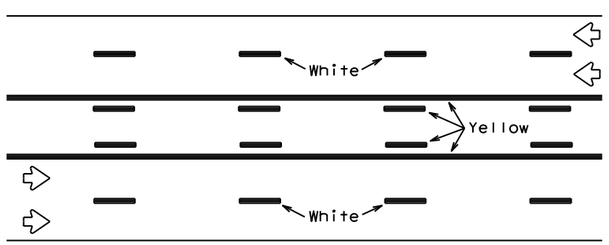

REFLECTORIZED PAVEMENT MARKINGS

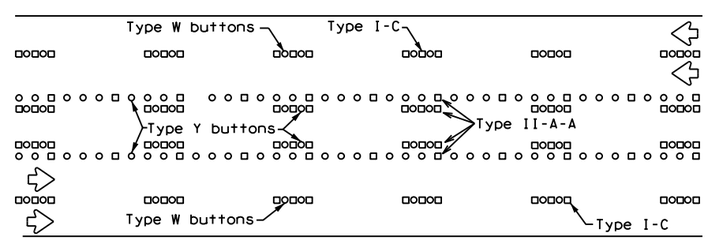

RAISED PAVEMENT MARKERS

Prefabricated markings may be substituted for reflectorized pavement markings.

TWO-WAY LEFT TURN LANE

STANDARD WORK ZONE PAVEMENT MARKINGS DETAILS

SOLID LINES

DOUBLE NO-PASSING LINE

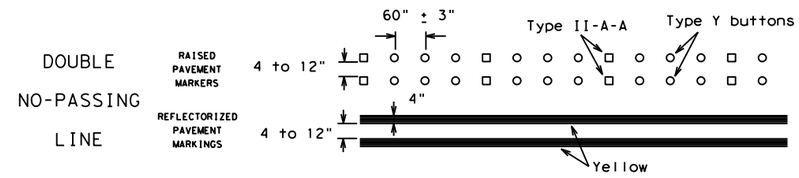

EDGE LINE OR SINGLE NO-PASSING LINE

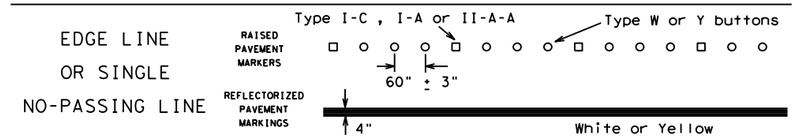

WIDE LINE

(FOR LEFT TURN CHANNELIZING LINE OR CHANNELIZING LINE USED TO DISCOURAGE LANE CHANGING.)

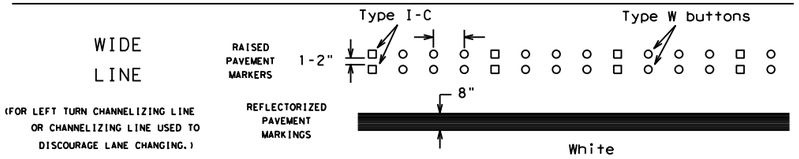

BROKEN LINES

CENTER LINE OR LANE LINE

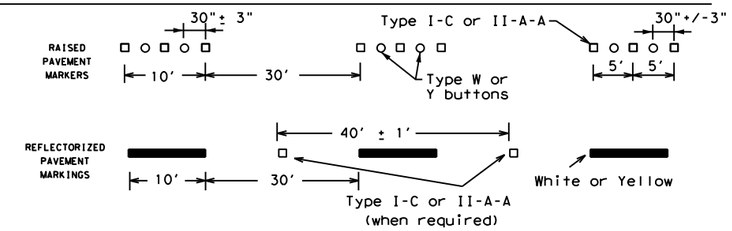

AUXILIARY OR LANEDROP LINE

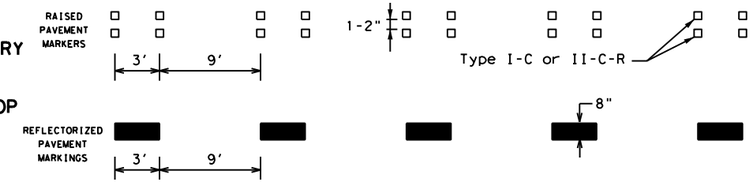

REMOVABLE MARKINGS WITH RAISED PAVEMENT MARKERS

If raised pavement markers are used to supplement REMOVABLE markings, the markers shall be applied to the top of the tape at the approximate mid length of tape used for broken lines or at 20 foot spacing for solid lines. This allows an easier removal of raised pavement markers and tape.

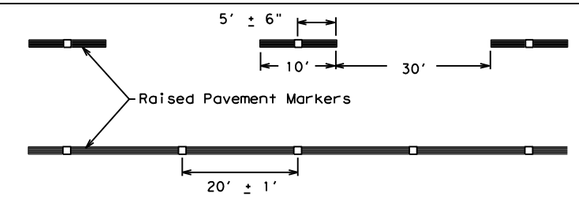

Centerline only - not to be used on edge lines

Raised pavement markers used as standard pavement markings shall be from the approved products list and meet the requirements of Item 672 "RAISED PAVEMENT MARKERS."

SHEET 12 OF 12

Texas Department of Transportation — Traffic Safety Division Standard

BARRICADE AND CONSTRUCTION PAVEMENT MARKING PATTERNS

BC(12)-21

FILE: bc-21.dgn	DN: TxDOT	CK: TxDOT	DW: TxDOT	CK: TxDOT
© TxDOT February 1998	CONT	SECT	JOB	HIGHWAY
REVISIONS 1-97 9-07 5-21 2-98 7-13 11-02 8-14	DIST		COUNTY	SHEET NO.

106

DISCLAIMER:
The use of this standard is governed by the "Texas Engineering Practice Act". No warranty of any kind is made by TxDOT for any purpose whatsoever. TxDOT assumes no responsibility for the conversion of this standard to other formats or for incorrect results or damages resulting from its use.

DATE:
FILE:

21-32-Prop01 (LW).dwg

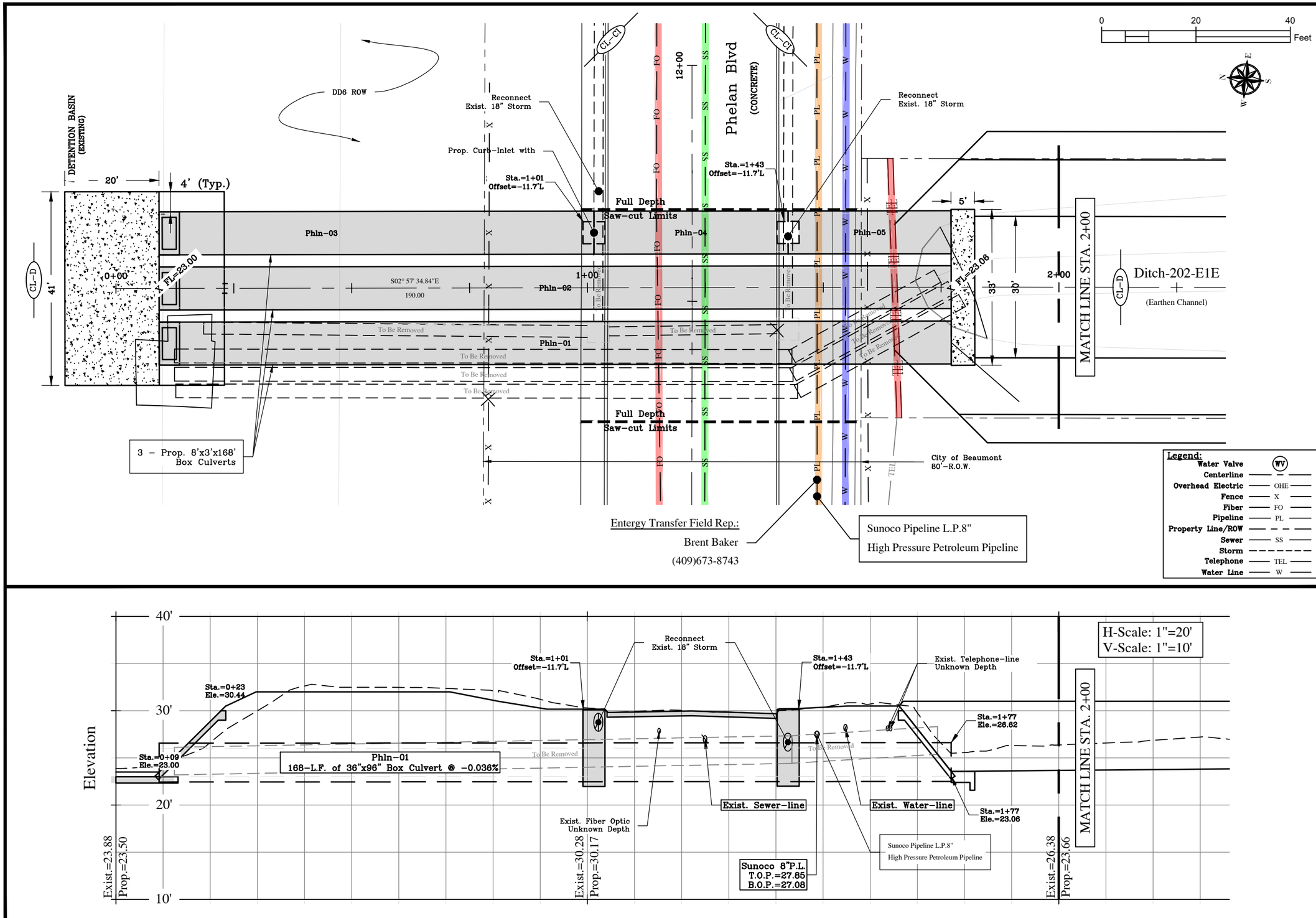

PROJECT LOCATION			
CITY	COUNTY	STATE	
BEAUMONT	JEFFERSON	TEXAS	
WATERSHED	DITCH NO.	SHEET	
200	202-E1E	21	

DRAINAGE DISTRICT NO. 6 JEFFERSON COUNTY, TEXAS

PROPOSED UTILITIES
PLAN & PROFILE

WALLACE R. WILSON, P.E. No.84857

DATE 10-03-22

STATE OF TEXAS LICENSED PROFESSIONAL ENGINEER WALLACE R. WILSON 84857

NO.	DATE	DRN	REVISION	APPROV.
1	6/22	EC	Phelan Blvd Crossing	BW
2				
3				
4				
5				
6				

21-32-Prop01 (LW).dwg

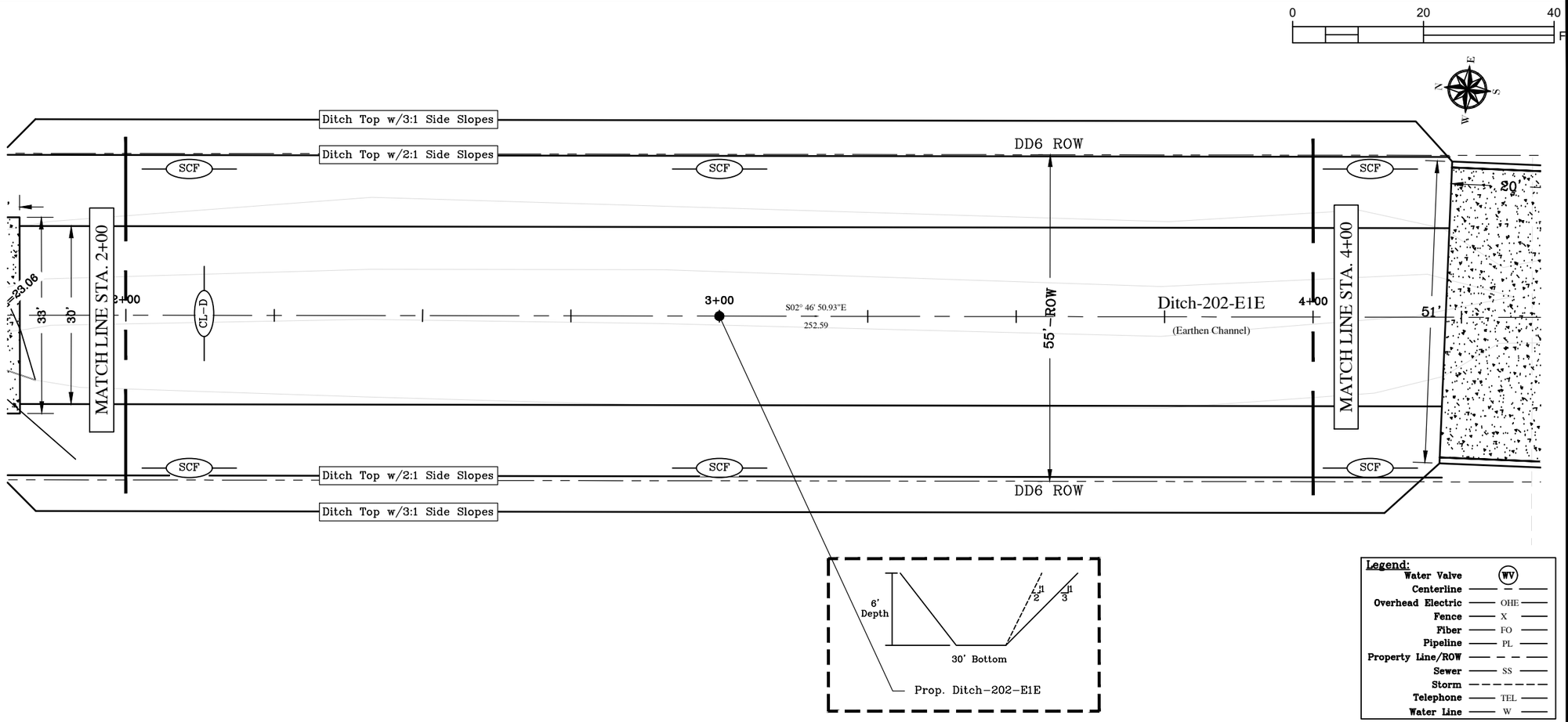

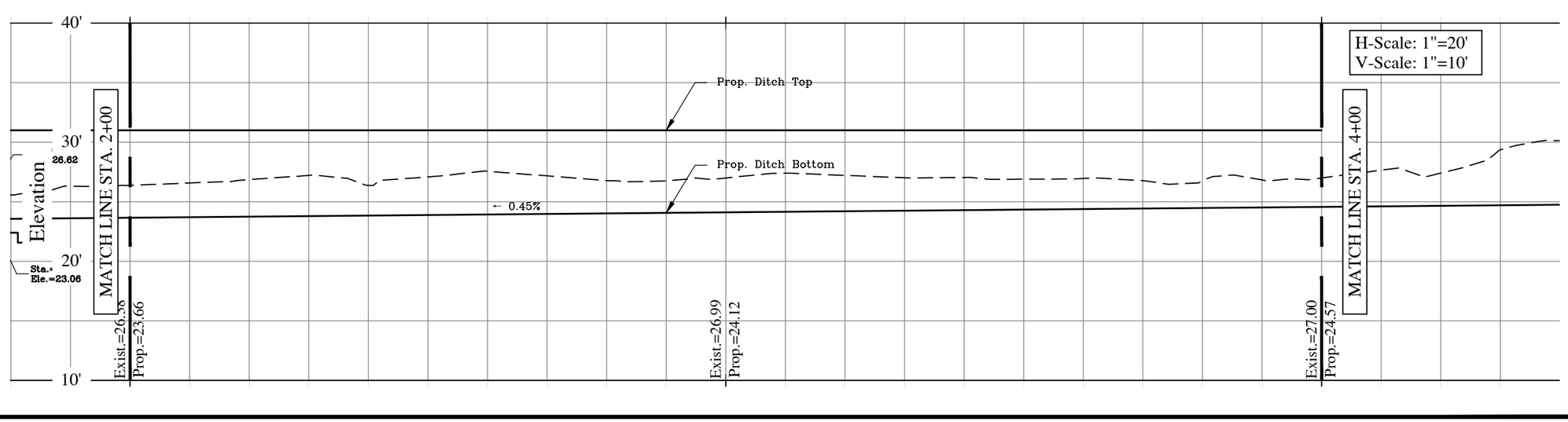

PROJECT LOCATION			
CITY	COUNTY	STATE	
BEAUMONT	JEFFERSON	TEXAS	
WATERSHED	DITCH NO.	SHEET	
200	202-E1E	22	

DRAINAGE DISTRICT NO. 6 JEFFERSON COUNTY, TEXAS

PROPOSED UTILITIES

PLAN & PROFILE

WALLACE R. WILSON. P.E. No.84857

DATE 10-03-22

STATE OF TEXAS WALLACE R. WILSON 84857 LICENSED PROFESSIONAL ENGINEER

NO.	DATE	DRN	REVISION	APPROV.
6				
5				
4				
3				
2				
1				

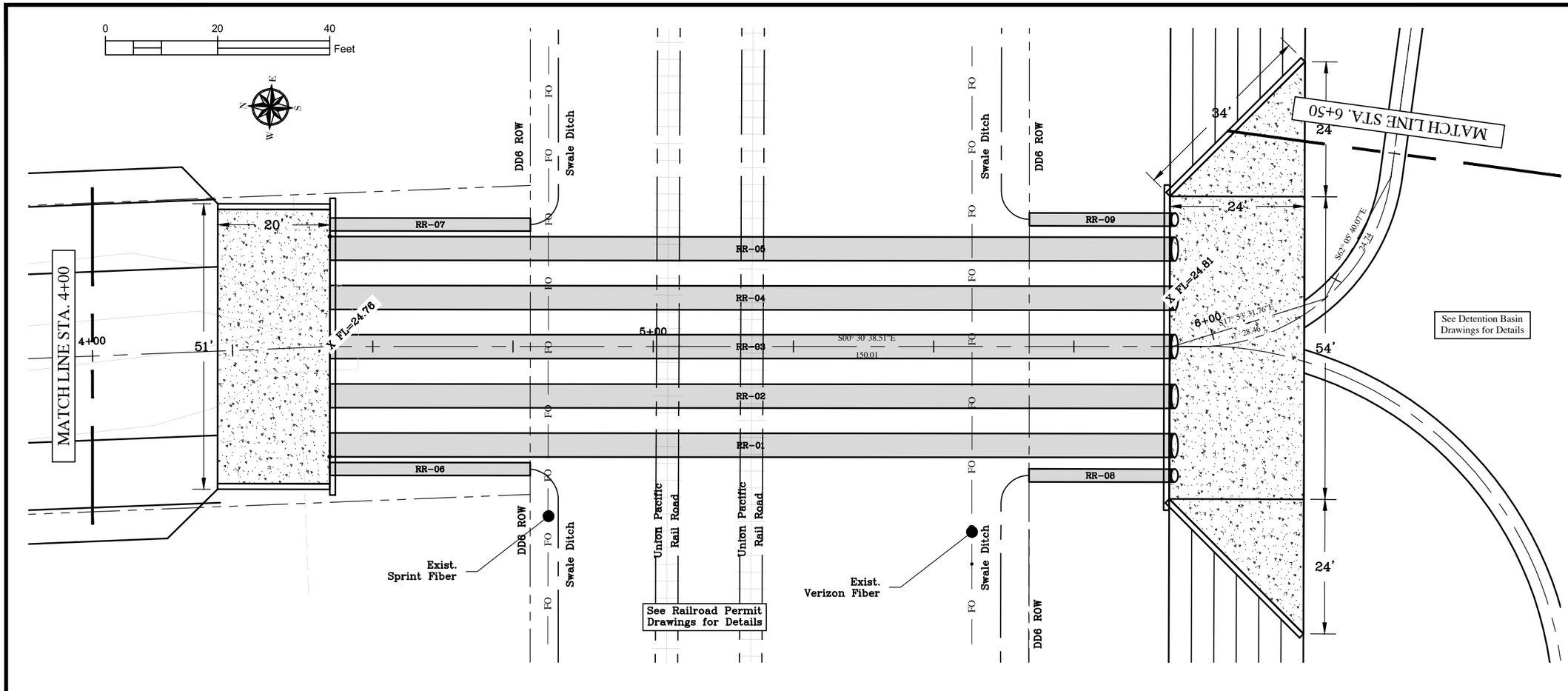

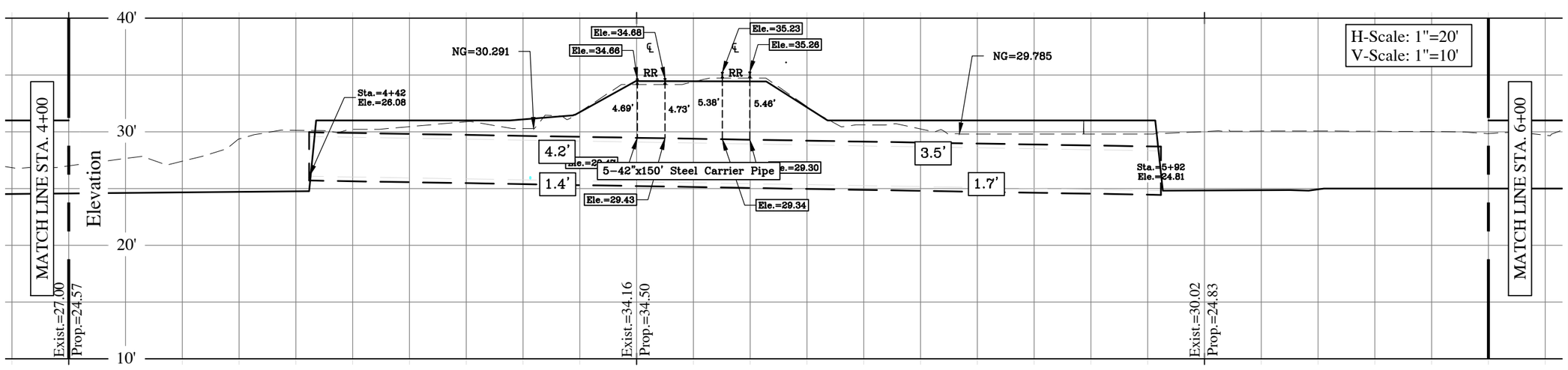

PROJECT LOCATION

CITY	COUNTY	STATE
BEAUMONT	JEFFERSON	TEXAS
WATERSHED	DITCH NO.	SHEET
200	202-E1E	23

DRAINAGE DISTRICT NO. 6 JEFFERSON COUNTY, TEXAS

PROPOSED UTILITIES
PLAN & PROFILE

WALLACE R. WILSON. P.E. No.84857

DATE 10-03-22

STATE OF TEXAS
WALLACE R. WILSON
84857
LICENSED PROFESSIONAL ENGINEER

NO.	DATE	DRN	REVISION	APPROV.
6				
5				
4				
3				
2				
1				

21-32-Prop01 (LW).dwg

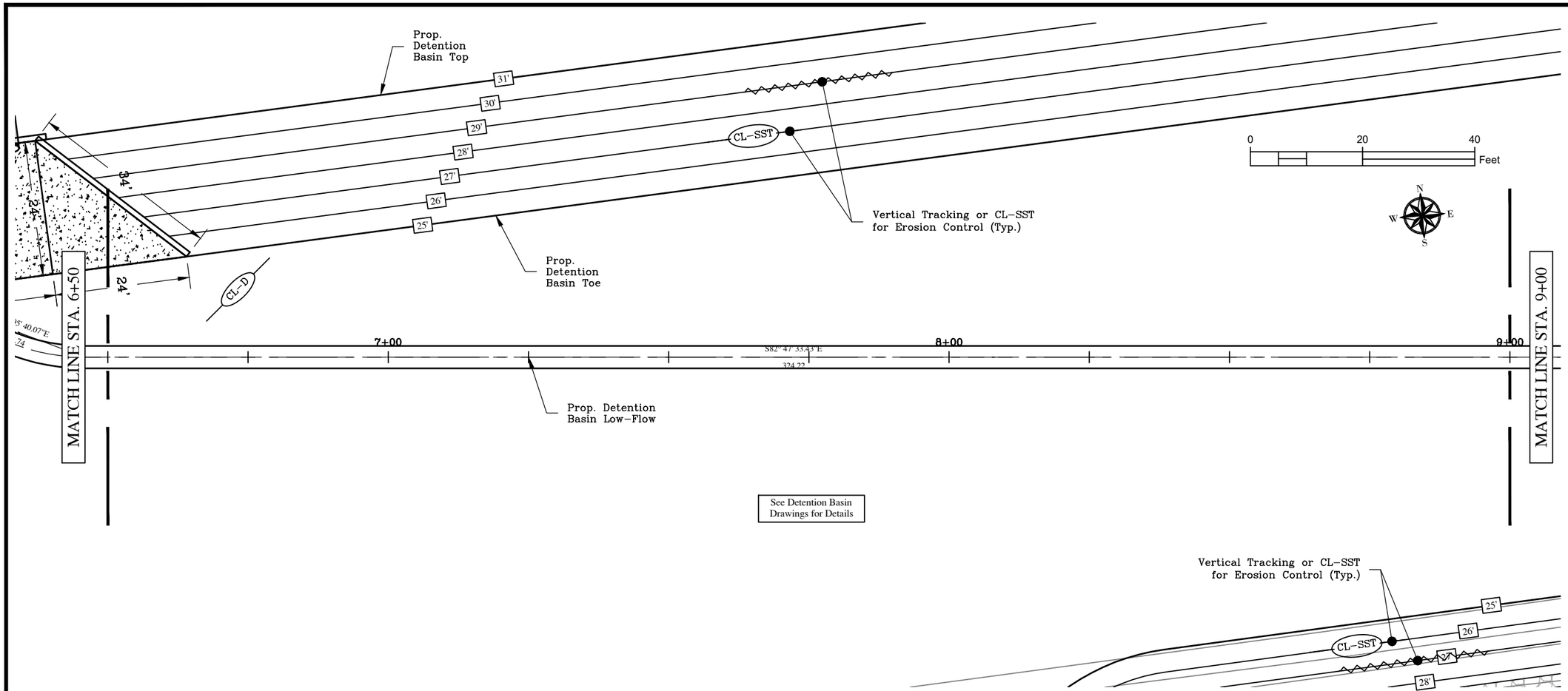

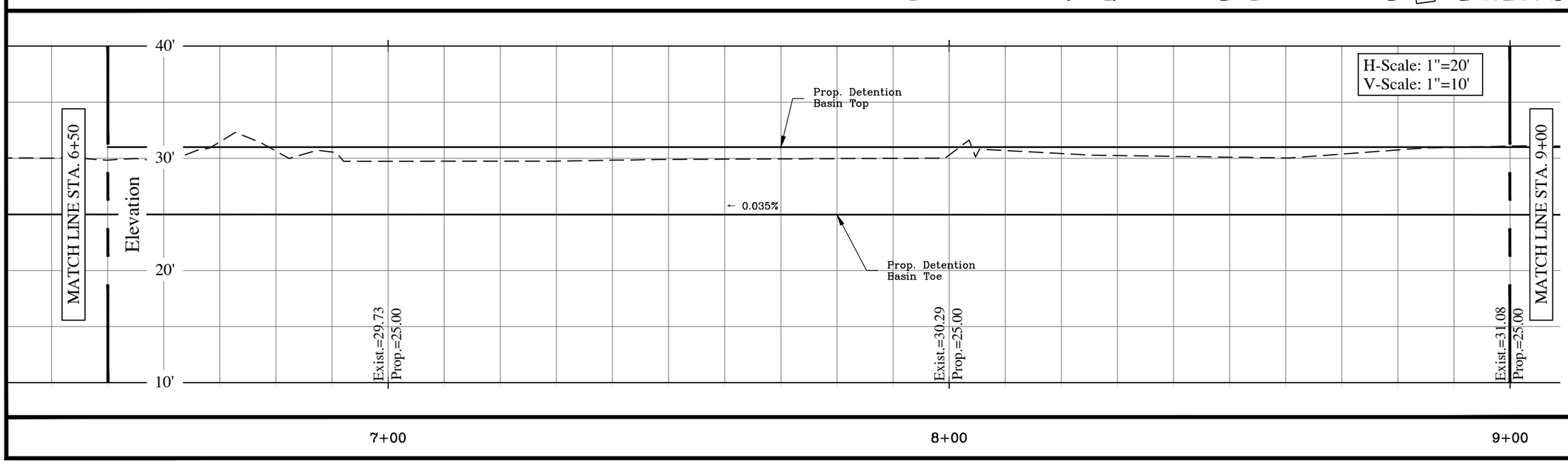

PROJECT LOCATION

CITY	COUNTY	STATE
BEAUMONT	JEFFERSON	TEXAS
WATERSHED	DITCH NO.	SHEET
200	202-E1E	24

DRAINAGE DISTRICT NO. 6 JEFFERSON COUNTY, TEXAS

PROPOSED UTILITIES
PLAN & PROFILE

WALLACE R. WILSON. P.E. No.84857

DATE 10-03-22

STATE OF TEXAS
WALLACE R. WILSON
84857
LICENSED PROFESSIONAL ENGINEER

NO.	DATE	DRN	REVISION	APPROV.
6				
5				
4				
3				
2				
1				

21-32-Prop01 (LW).dwg

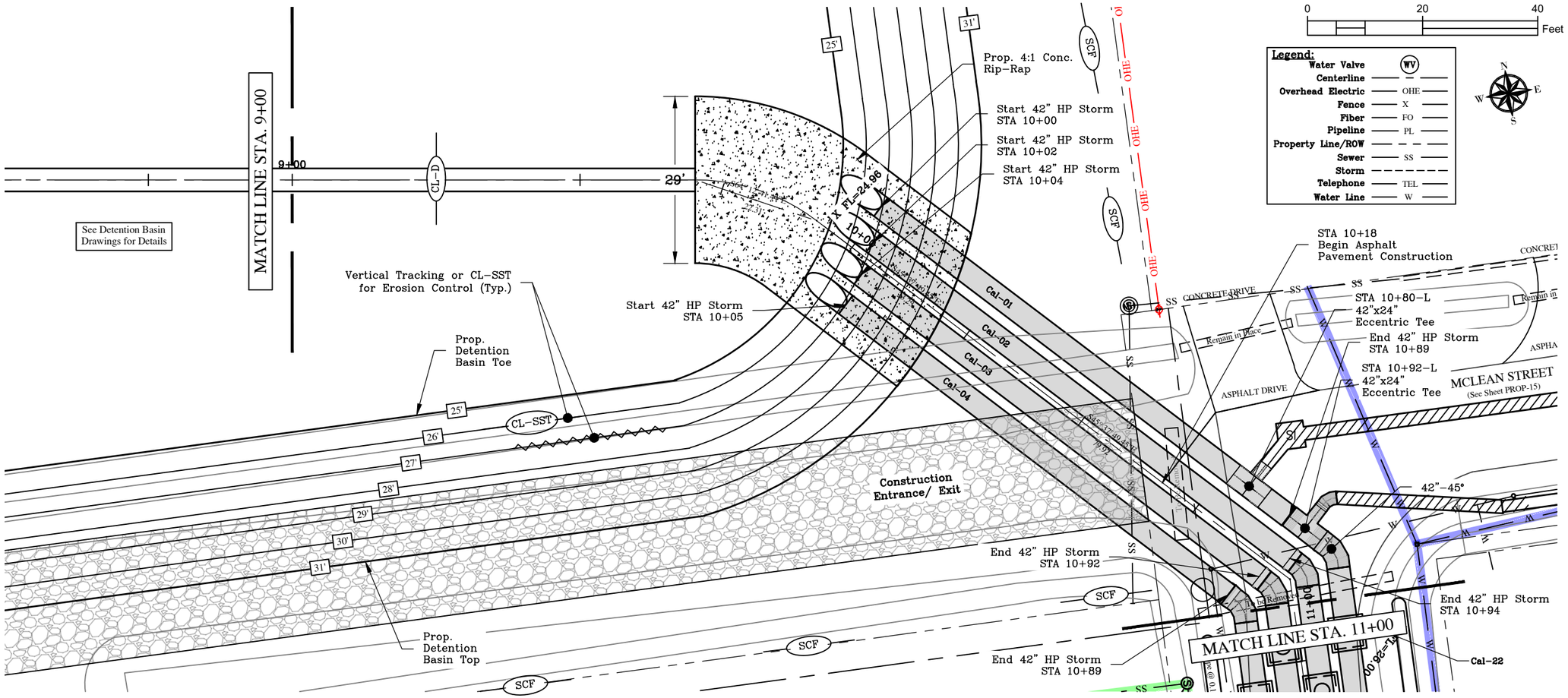

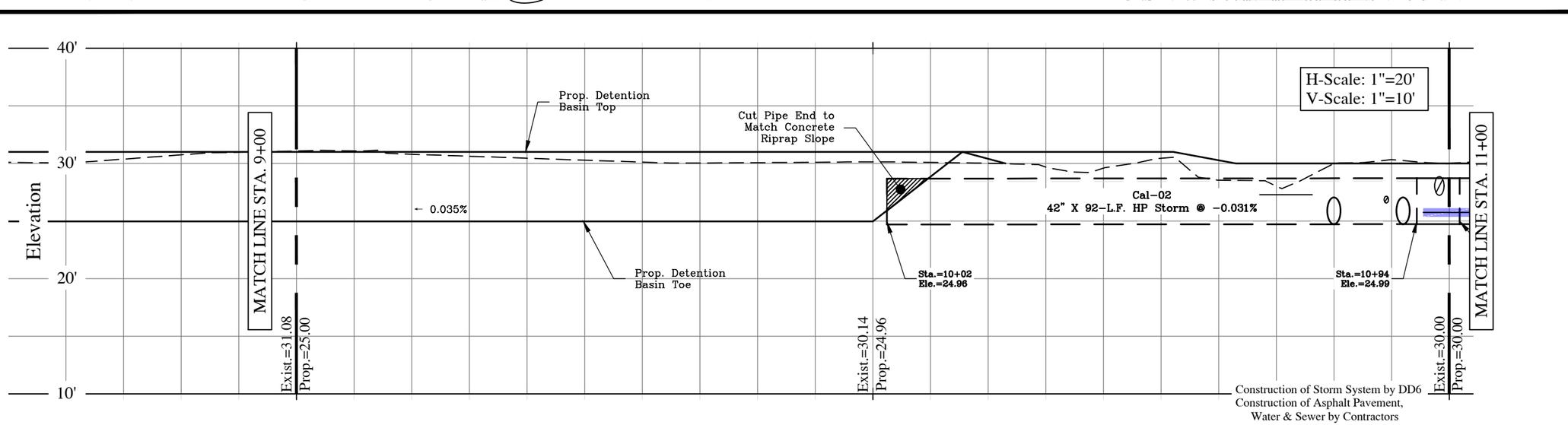

PROJECT LOCATION

CITY	COUNTY	STATE
BEAUMONT	JEFFERSON	TEXAS
WATERSHED	DITCH NO.	SHEET
200	202-E1E	25

DRAINAGE DISTRICT NO. 6 JEFFERSON CO. TEXAS

PROPOSED UTILITIES & DRAINAGE
CALHOUN AVE.
PLAN & PROFILE
STA 9+00 to STA 11+00

WALLACE R. WILSON. P.E. No.84857

DATE 10-03-22

STATE OF TEXAS WALLACE R. WILSON 84857 LICENSED PROFESSIONAL ENGINEER

NO.	DATE	DRN	REVISION	APPROV.
6				
5				
4				
3				
2				
1				

21-32-62-Prop01 (LW).dwg

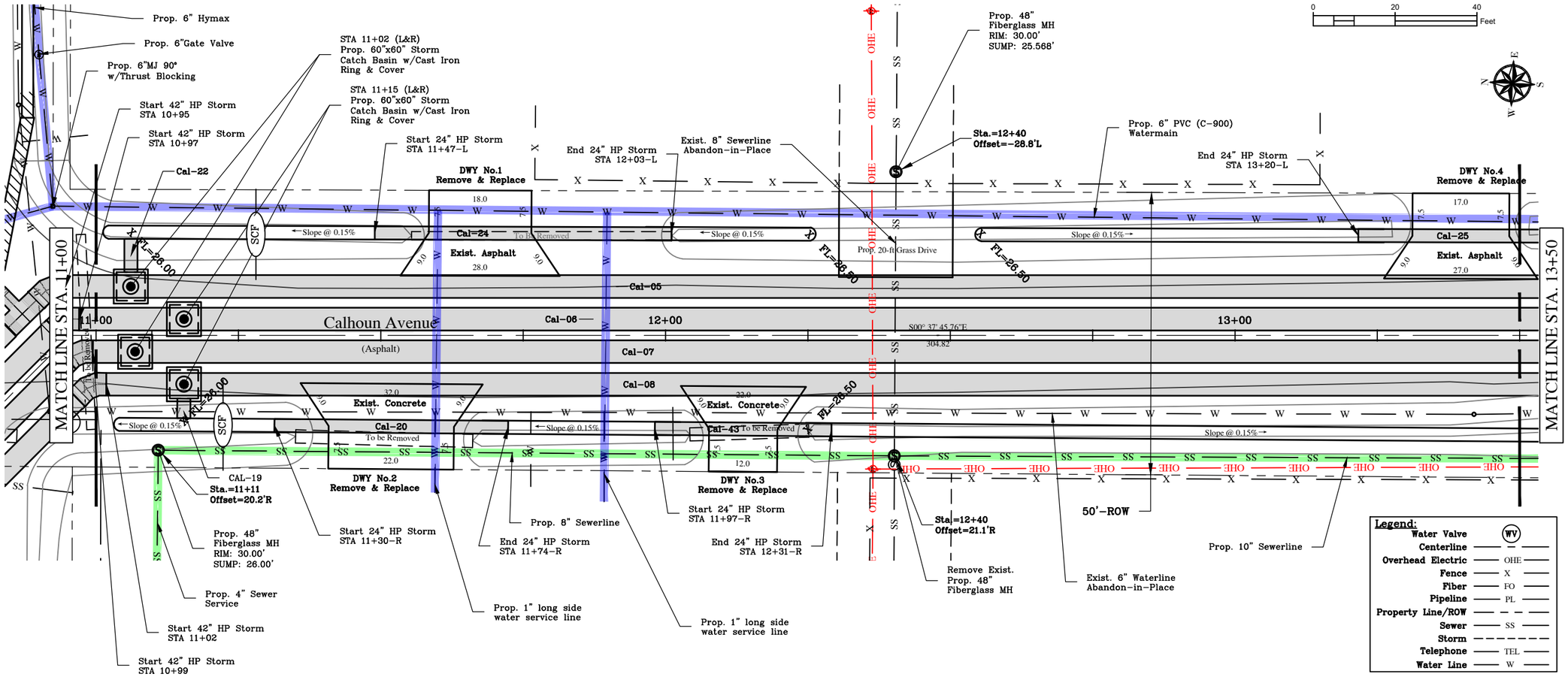

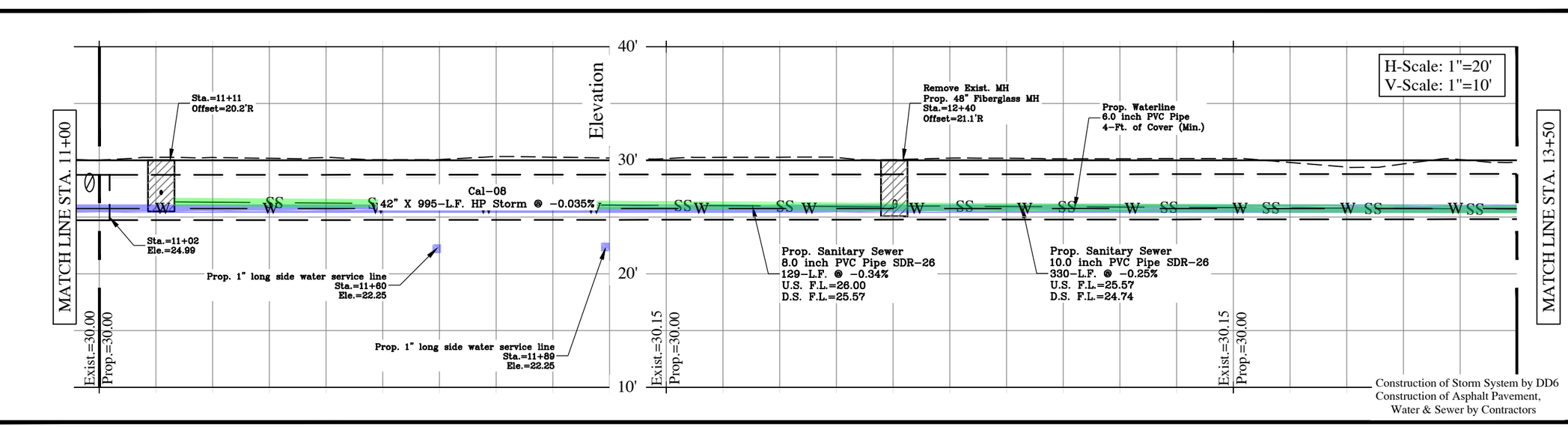

Construction of Storm System by DD6
Construction of Asphalt Pavement, Water & Sewer by Contractors

PROJECT LOCATION			
CITY	COUNTY	STATE	
BEAUMONT	JEFFERSON	TEXAS	
WATERSHED	DITCH NO.	SHEET	
200	202-E1E	26	

DRAINAGE DISTRICT NO. 6 JEFFERSON COUNTY, TEXAS

PROPOSED UTILITIES & DRAINAGE
CALHOUN AVE.
PLAN & PROFILE
STA 11+00 to STA 13+50

WALLACE R. WILSON. P.E. No.84857

DATE 10-03-22

STATE OF TEXAS WALLACE R. WILSON 84857 LICENSED PROFESSIONAL ENGINEER

NO.	DATE	DRN	REVISION	APPROV.
6				
5				
4				
3				
2				
1				

21-32-62-Prop01 (LW).dwg

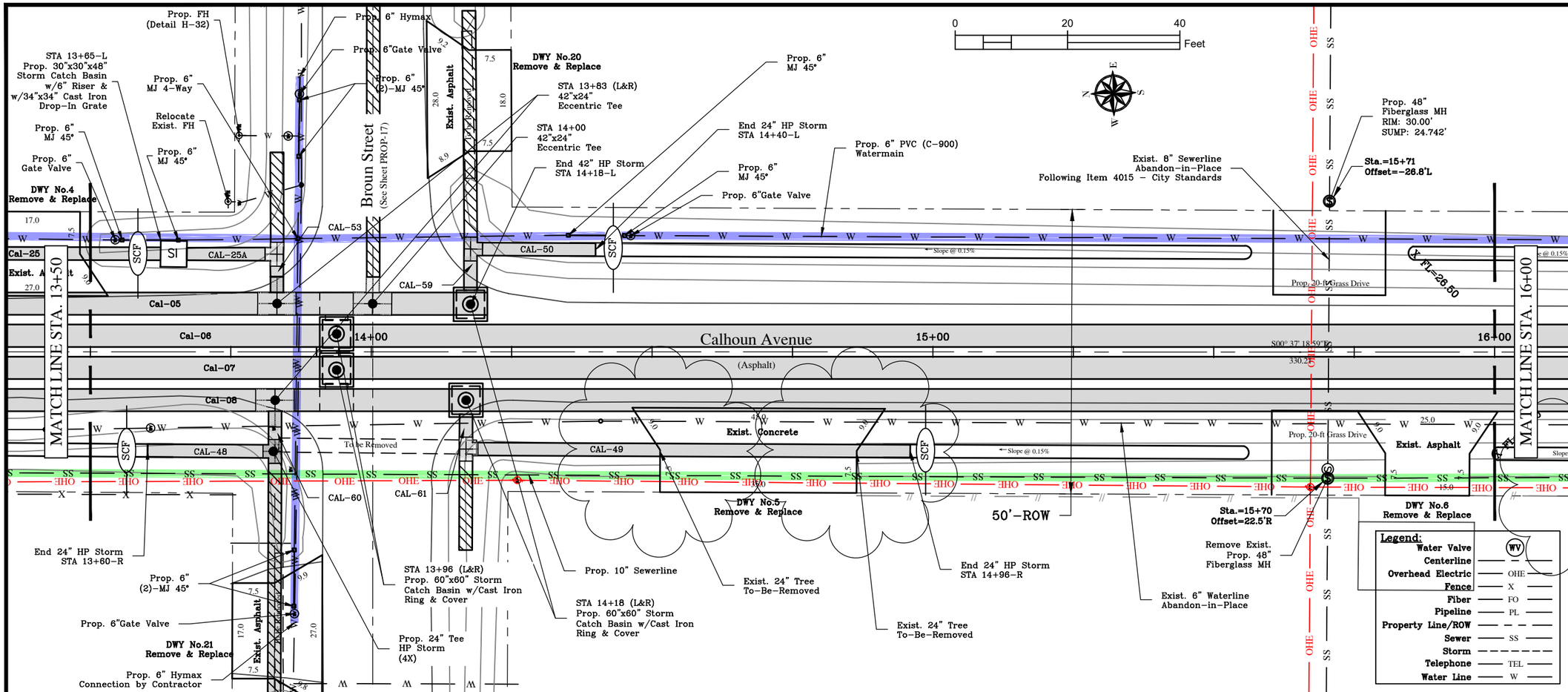

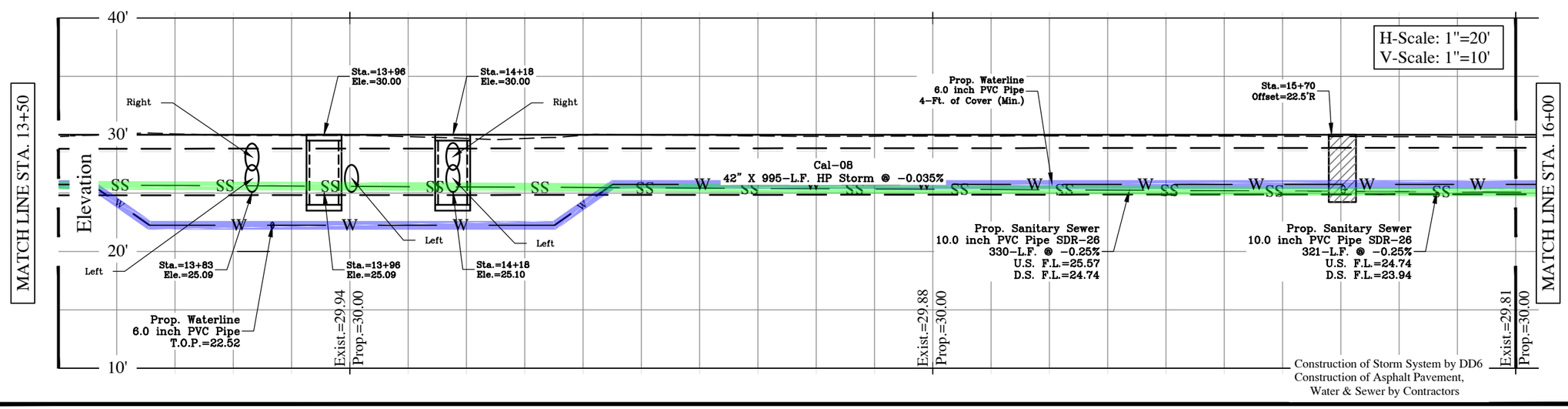

PROJECT LOCATION			
CITY	COUNTY	STATE	
BEAUMONT	JEFFERSON	TEXAS	
WATERSHED	DITCH NO.	SHEET	
200	202-E1E	27	

DRAINAGE DISTRICT NO. 6 JEFFERSON COUNTY, TEXAS

PROPOSED UTILITIES & DRAINAGE
CALHOUN AVE.
PLAN & PROFILE
STA 13+50 to STA 16+00

WALLACE R. WILSON. P.E. No.84857

DATE 10-03-22

STATE OF TEXAS WALLACE R. WILSON 84857 LICENSED PROFESSIONAL ENGINEER

NO.	DATE	DRN	REVISION	APPROV.
6				
5				
4				
3				
2				
1				

21-32-Prop01 (LW).dwg

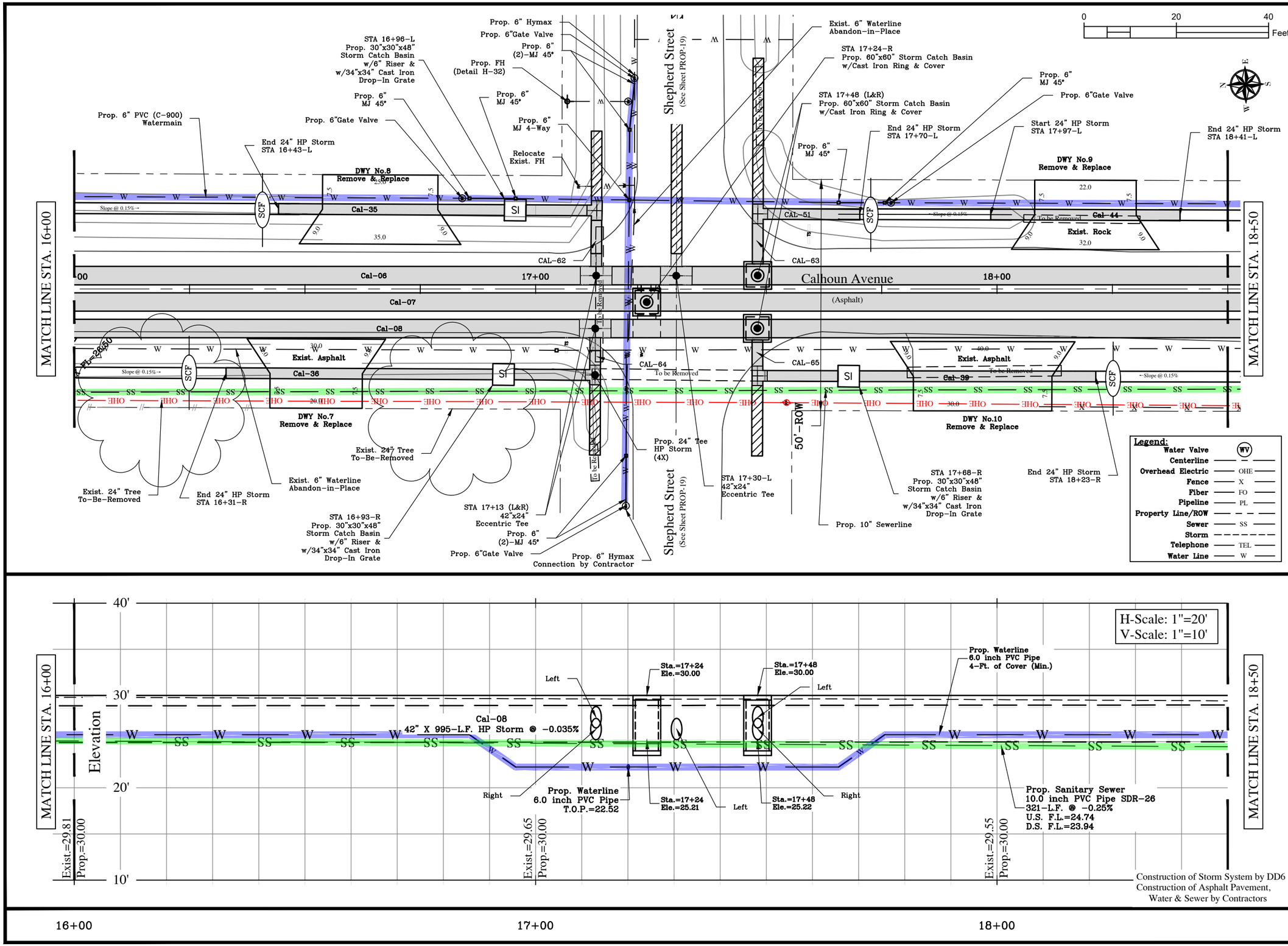

PROJECT LOCATION			
CITY	COUNTY	STATE	
BEAUMONT	JEFFERSON	TEXAS	
WATERSHED	DITCH NO.	SHEET	
200	202-E1E	28	

DRAINAGE DISTRICT NO. 6 JEFFERSON COUNTY, TEXAS

PROPOSED UTILITIES & DRAINAGE

CALHOUN AVE.

PLAN & PROFILE

STA 16+00 to STA 18+50

WALLACE R. WILSON. P.E. No.84857

DATE 10-03-22

Walter R. Wilson P.E.

STATE OF TEXAS WALLACE R. WILSON 84857 LICENSED PROFESSIONAL ENGINEER

NO.	DATE	DRN	REVISION	APPROV.
6				
5				
4				
3				
2				
1				

21-32-Prop01 (LW).dwg

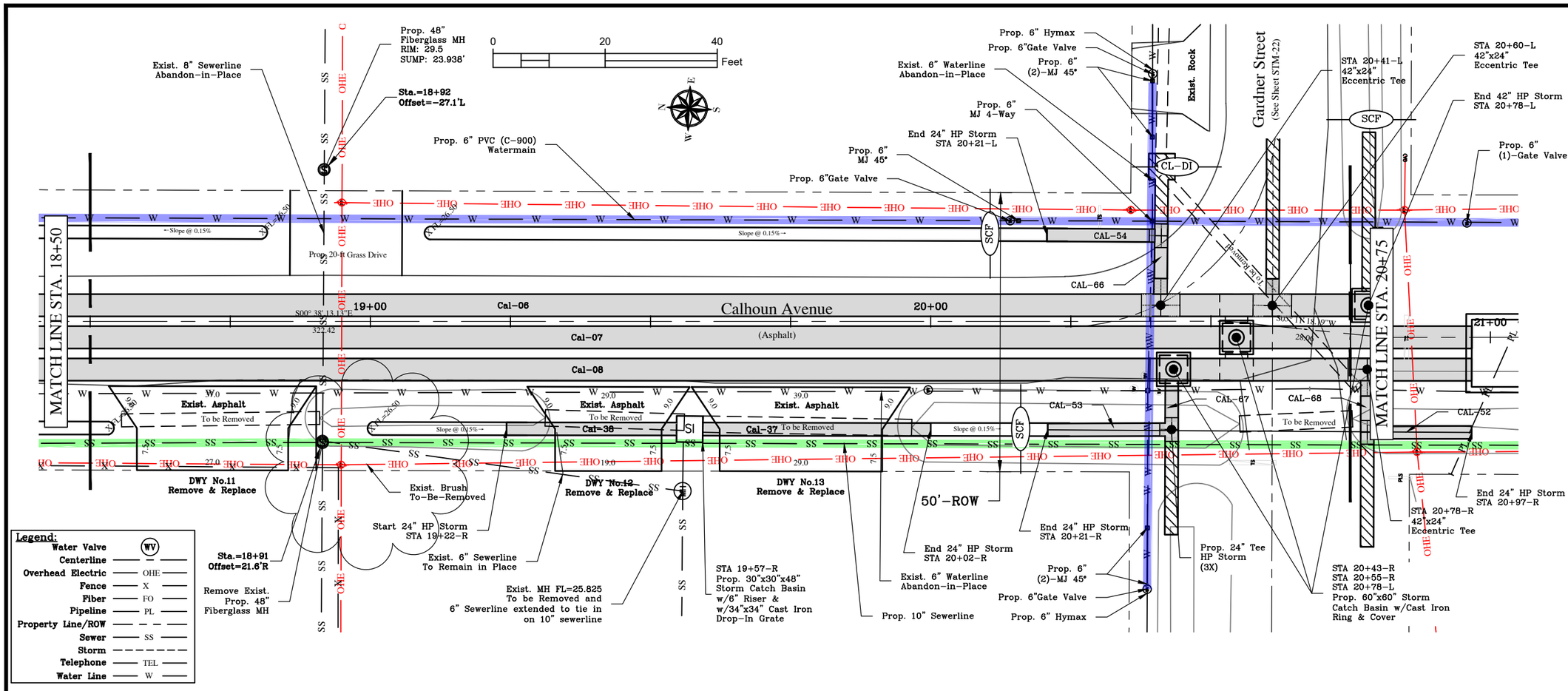

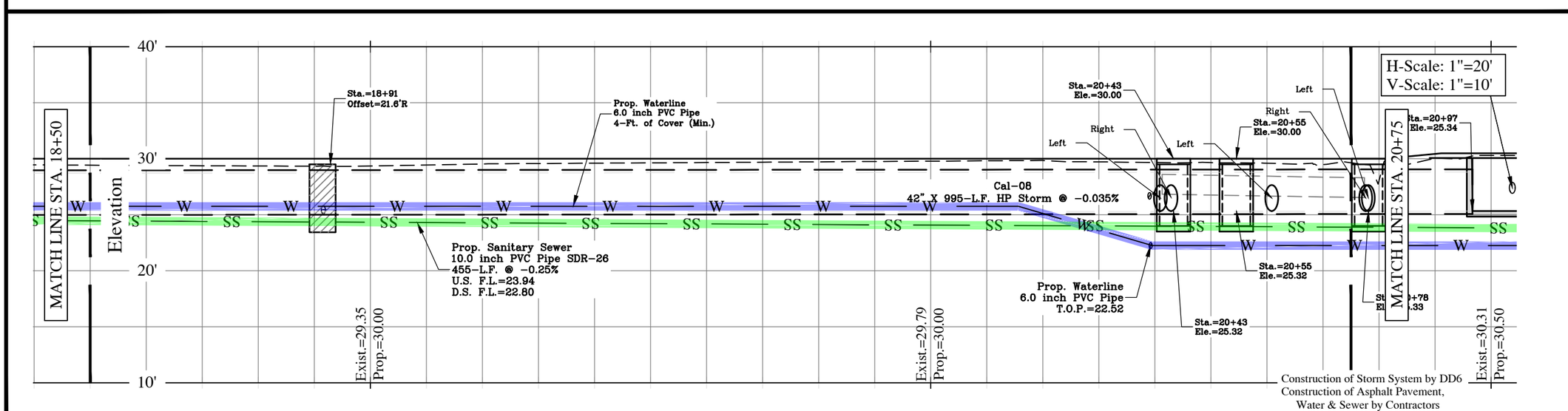

PROJECT LOCATION			
CITY	COUNTY	STATE	
BEAUMONT	JEFFERSON	TEXAS	
WATERSHED	DITCH NO.	SHEET	
200	202-E1E	29	

DRAINAGE DISTRICT NO. 6 JEFFERSON COUNTY, TEXAS

PROPOSED UTILITIES & DRAINAGE
CALHOUN AVE.
PLAN & PROFILE
STA 18+50 to STA 20+75

WALLACE R. WILSON. P.E. No.84857

DATE 10-03-22

STATE OF TEXAS WALLACE R. WILSON 84857 LICENSED PROFESSIONAL ENGINEER

NO.	DATE	DRN	REVISION	APPROV.
6				
5				
4				
3				
2				
1				

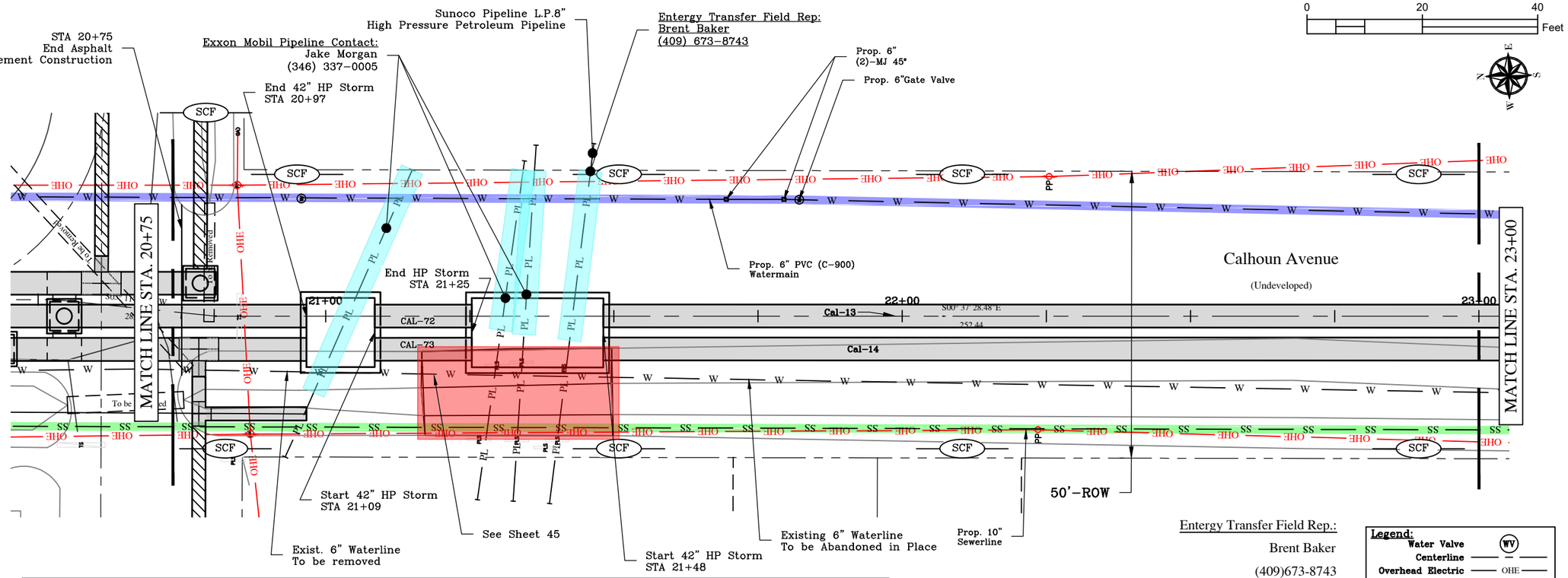

Entergy Transfer Field Rep.:
Brent Baker
(409)673-8743

Exxon Mobil Pipeline Contact:
Cole Crews
(346) 242-3476
Jake morgan
(346) 337-0005

Legend:

Water Valve	WV
Centerline	
Overhead Electric	OHE
Fence	X
Fiber	FO
Pipeline	PL
Property Line/ROW	
Sewer	SS
Storm	
Telephone	TEL
Water Line	W

Excavation Methods for Pipelines:

1. All aerial pipelines shall be mechanically excavated to 2-Ft outside of pipe.
2. All exist. concrete shall be demoed by saw cutting and removed by hand when working within 2-ft of the pipelines.
4. When working within 2-ft of the pieplines only use manual/hand digging tools. No Vibratory Equipment.
5. All buried pipelines shall be hydro excavated to 2-ft outside of pipeline.

To Be Hydro Excavated

Demo Exist. Conc. Channel
No Vibratory Equipment

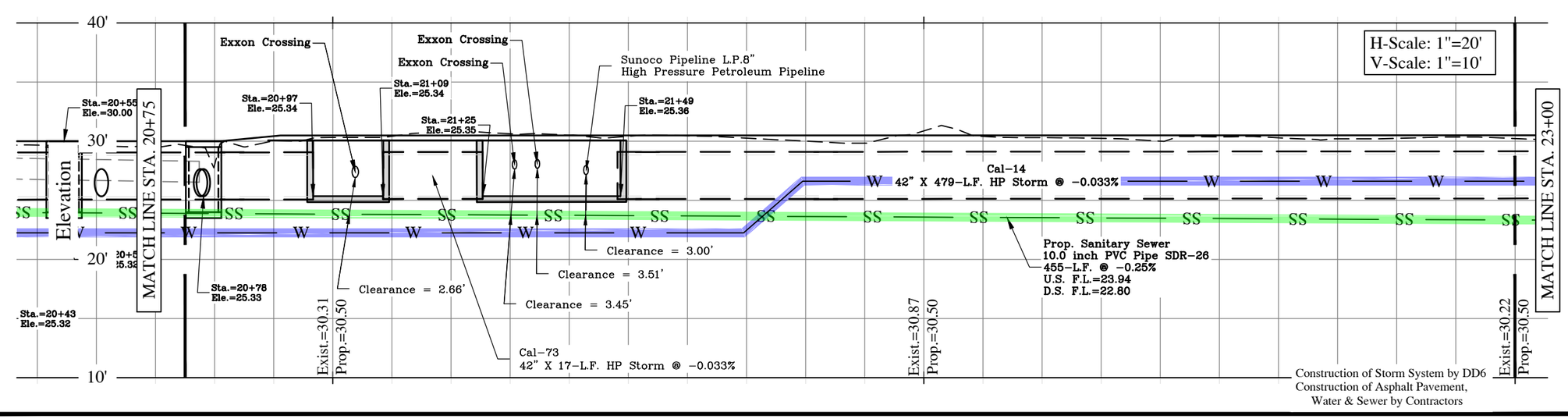

PROJECT LOCATION

STATE	COUNTY	CITY
TEXAS	JEFFERSON	BEAUMONT
SHEET	DITCH NO.	WATERSHED
30	202-E1E	200

DRAINAGE DISTRICT NO. 6 JEFFERSON CO. TEXAS

PROPOSED UTILITIES & DRAINAGE
CALHOUN AVE.
PLAN & PROFILE
STA 20+75 to STA 23+00

WALLACE R. WILSON. P.E. No.84857

DATE 10-03-22

STATE OF TEXAS
WALLACE R. WILSON
84857
LICENSED PROFESSIONAL ENGINEER

NO.	DATE	DRN	REVISION	APPROV.
6				
5				
4				
3				
2				
1				

21-32-Prop01 (LW).dwg

21-32-Prop01 (LW).dwg

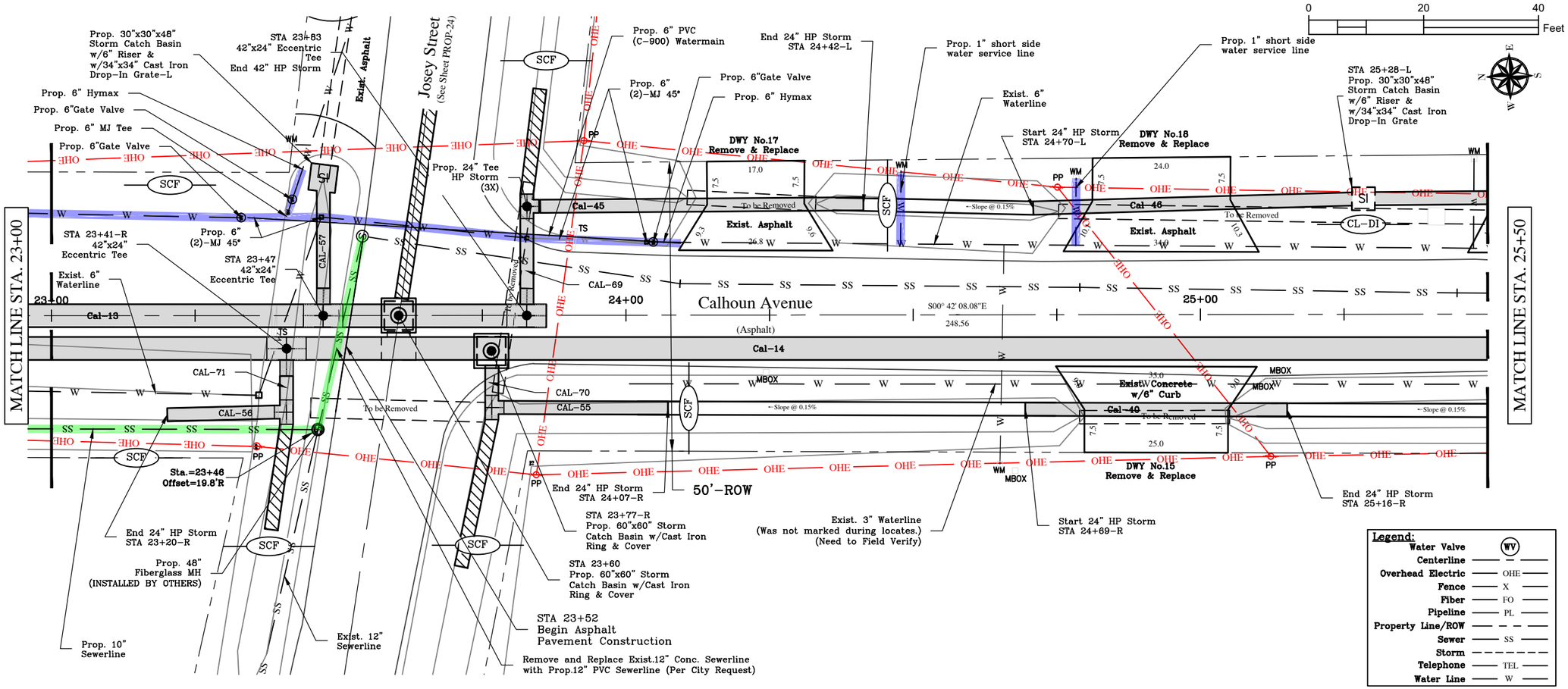

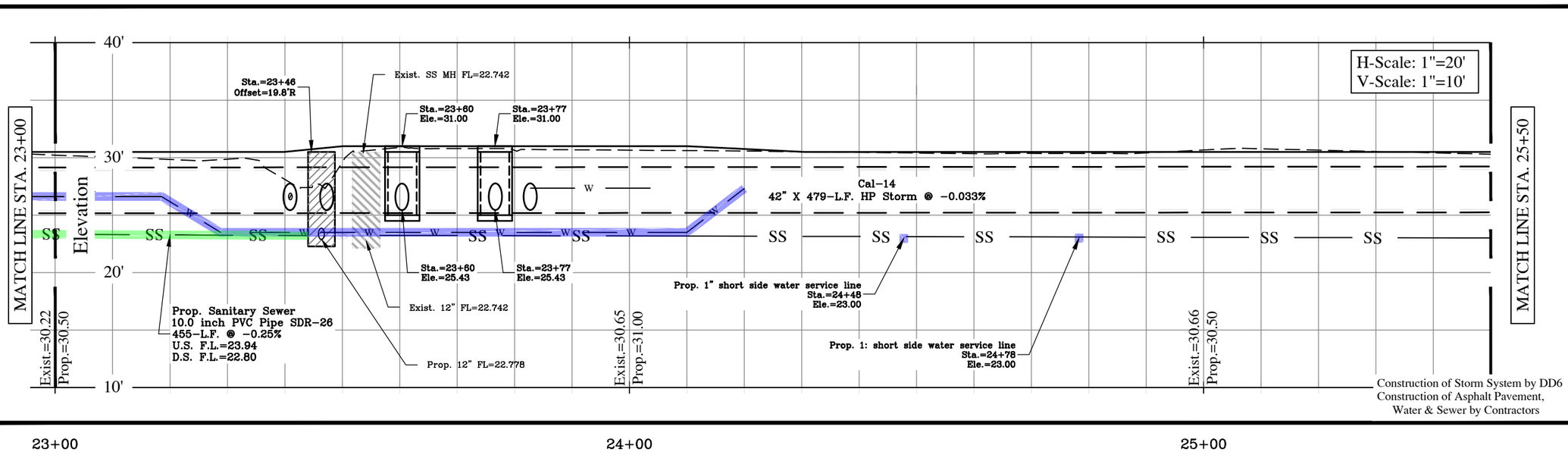

PROJECT LOCATION			
CITY	COUNTY	STATE	
BEAUMONT	JEFFERSON	TEXAS	
WATERSHED	DITCH NO.	SHEET	
200	202-E1E	31	

DRAINAGE DISTRICT NO. 6 JEFFERSON CO. TEXAS

PROPOSED UTILITIES & DRAINAGE
CALHOUN AVE.
PLAN & PROFILE
STA 23+00 to STA 25+50

WALLACE R. WILSON. P.E. No.84857

DATE 10-03-22

STATE OF TEXAS WALLACE R. WILSON 84857 LICENSED PROFESSIONAL ENGINEER

NO.	DATE	DRN	REVISION	APPROV.
6				
5				
4				
3				
2				
1				

21-32-Prop01 (LW).dwg

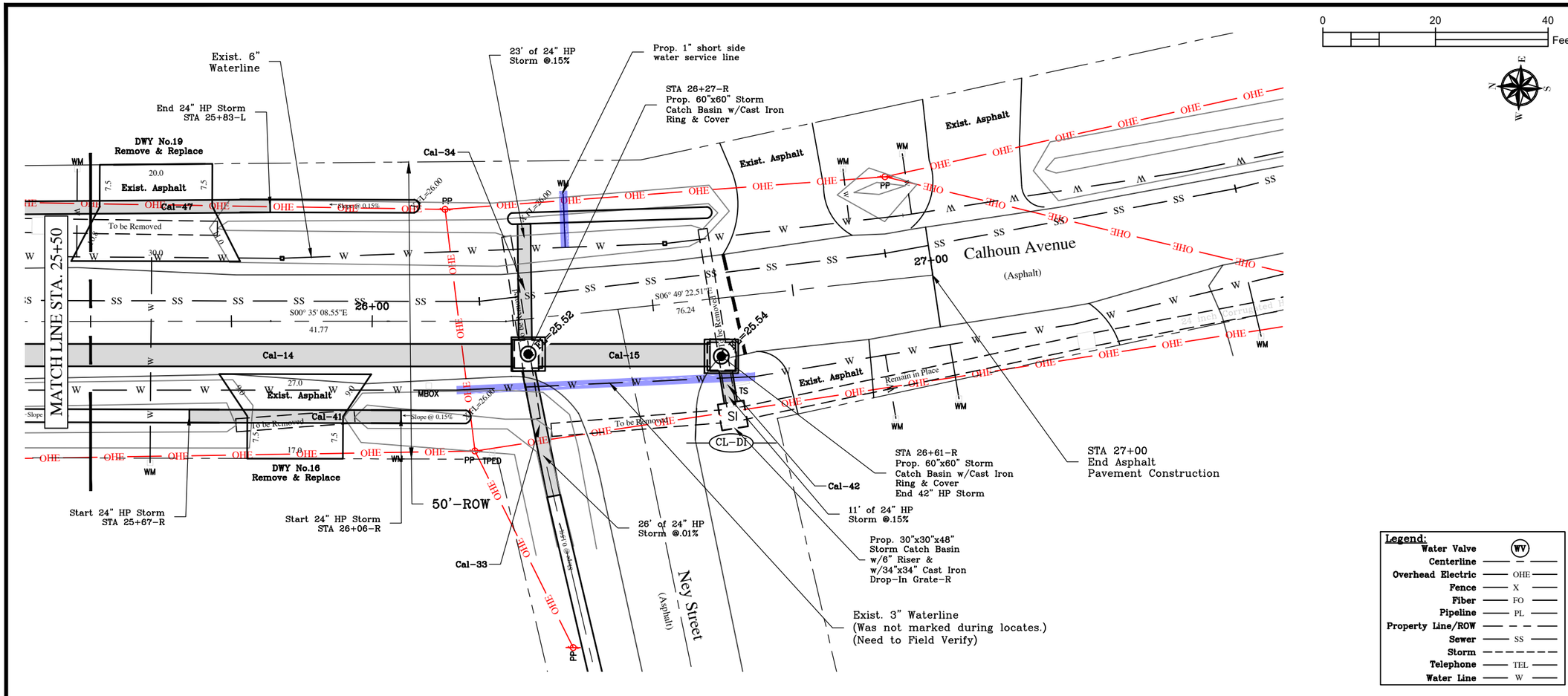

Legend:

Water Valve	WV
Centerline	— — —
Overhead Electric	OHE
Fence	X
Fiber	FO
Pipeline	PL
Property Line/ROW	— — —
Sewer	SS
Storm	— — —
Telephone	TEL
Water Line	W

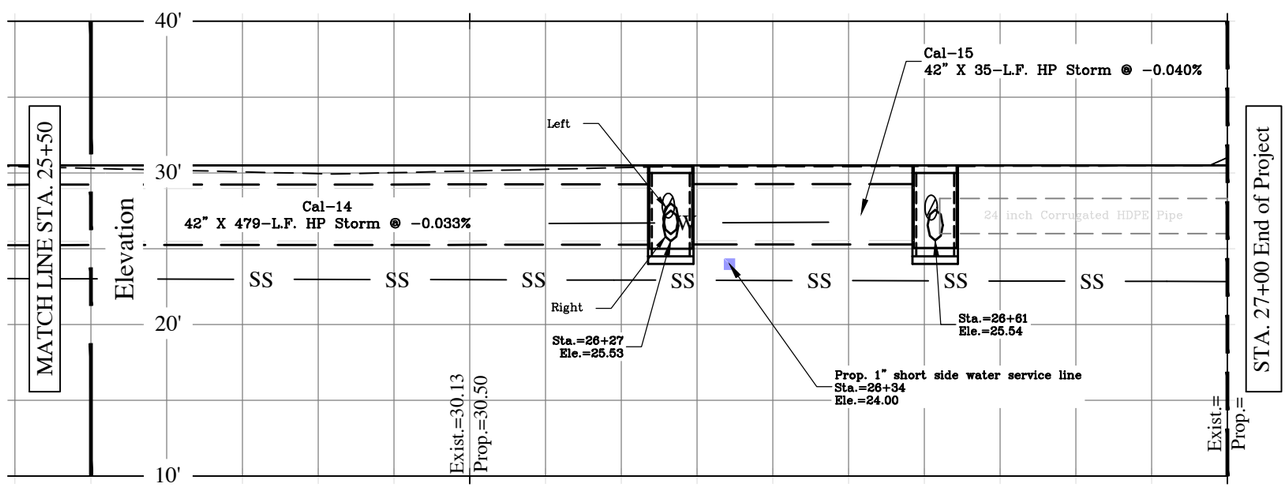

H-Scale: 1"=20'
V-Scale: 1"=10'

Construction of Storm System by DD6
Construction of Asphalt Pavement,
Water & Sewer by Contractors

PROJECT LOCATION

CITY	COUNTY	STATE
BEAUMONT	JEFFERSON	TEXAS
WATERSHED	DITCH NO.	SHEET
200	202-E1E	32

DRAINAGE DISTRICT NO. 6 JEFFERSON COUNTY, TEXAS

PROPOSED UTILITIES & DRAINAGE
CALHOUN AVE.
PLAN & PROFILE
STA 25+50 to STA 27+00

WALLACE R. WILSON. P.E. No.84857

DATE 10-03-22

STATE OF TEXAS
WALLACE R. WILSON
84857
LICENSED PROFESSIONAL ENGINEER

NO.	DATE	DRN	REVISION	APPROV.
6				
5				
4				
3				
2				
1				

33-43-Prop02 (LW).dwg

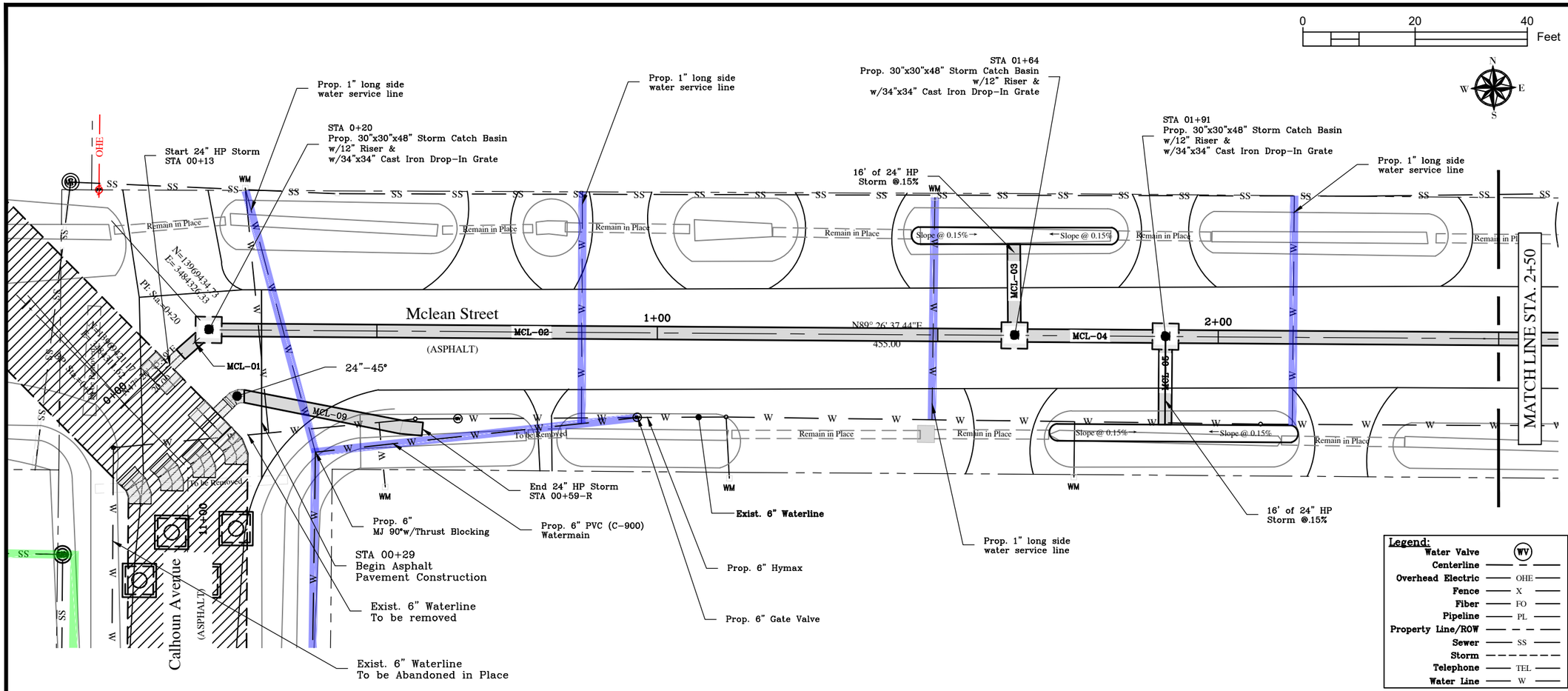

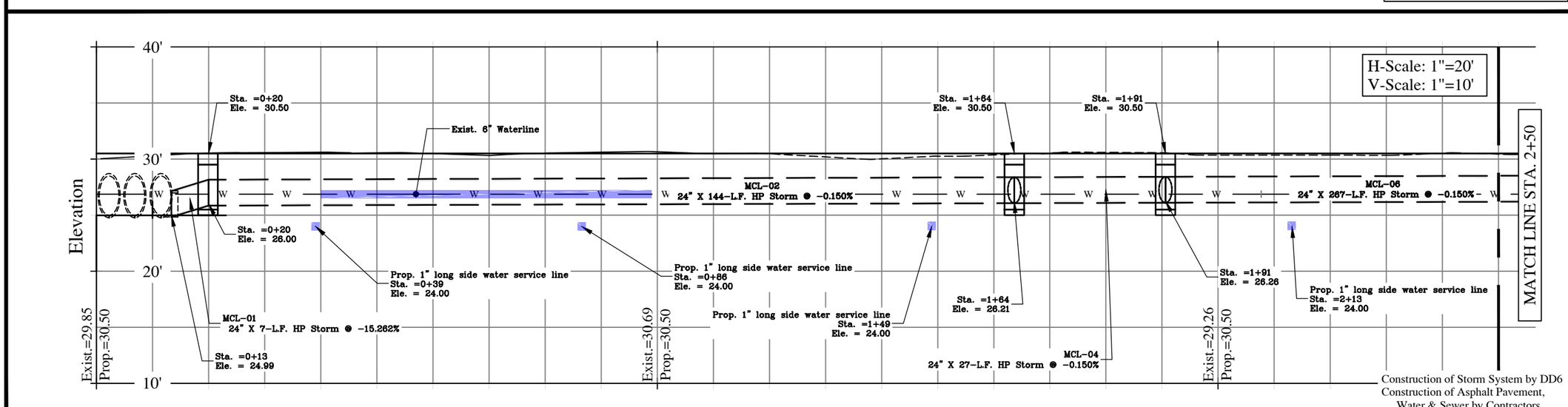

Construction of Storm System by DD6
Construction of Asphalt Pavement,
Water & Sewer by Contractors

PROJECT LOCATION			
CITY	COUNTY	STATE	
BEAUMONT	JEFFERSON	TEXAS	
WATERSHED	DITCH NO.	SHEET	
200	202-E1E	33	

DRAINAGE DISTRICT NO. 6 JEFFERSON COUNTY, TEXAS

PROPOSED UTILITIES & DRAINAGE
MCLEAN ST.
PLAN AND PROFILE
STA 00+00 to STA 02+50

WALLACE R. WILSON. P.E. No.84857

DATE 10-03-22

Walter R. Wilson P.E.

WALLACE R. WILSON 84857 LICENSED PROFESSIONAL ENGINEER STATE OF TEXAS

NO.	DATE	DRN	REVISION	APPROV.
6				
5				
4				
3				
2				
1				

33-43-Prop02 (LW).dwg

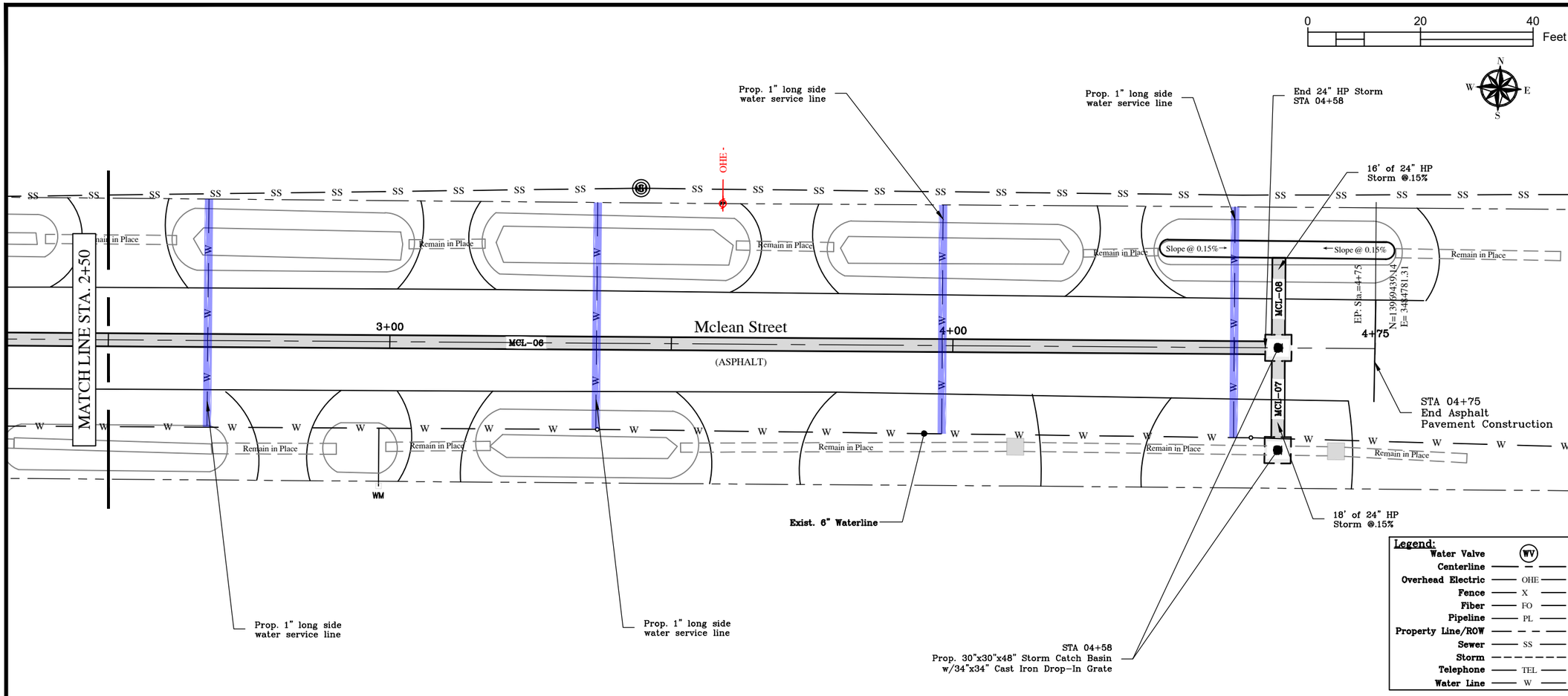

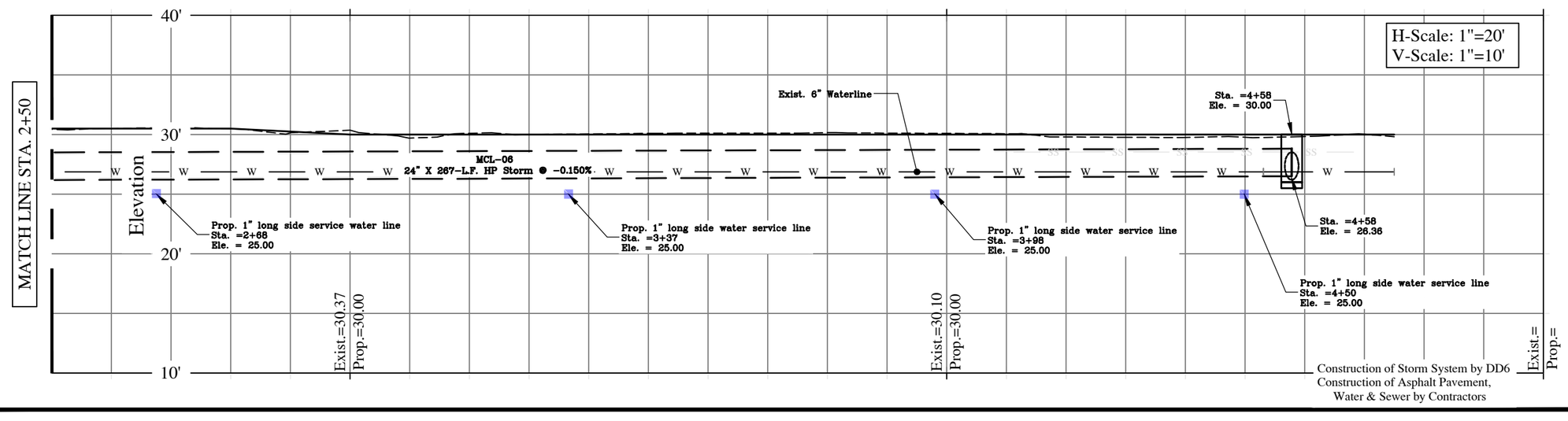

PROJECT LOCATION			
CITY	COUNTY	STATE	
BEAUMONT	JEFFERSON	TEXAS	
WATERSHED	DITCH NO.	SHEET	
200	202-E1E	34	

DRAINAGE DISTRICT NO. 6 JEFFERSON COUNTY, TEXAS

PROPOSED UTILITIES & DRAINAGE
MCLEAN ST.
PLAN AND PROFILE
STA 02+50 to STA 05+00

WALLACE R. WILSON. P.E. No.84857

DATE 10-03-22

Wallace R. Wilson P.E.

STATE OF TEXAS
WALLACE R. WILSON
84857
LICENSED PROFESSIONAL ENGINEER

NO.	DATE	DRN	REVISION	APPROV.
6				
5				
4				
3				
2				
1				

33-43-Prop02 (LW).dwg

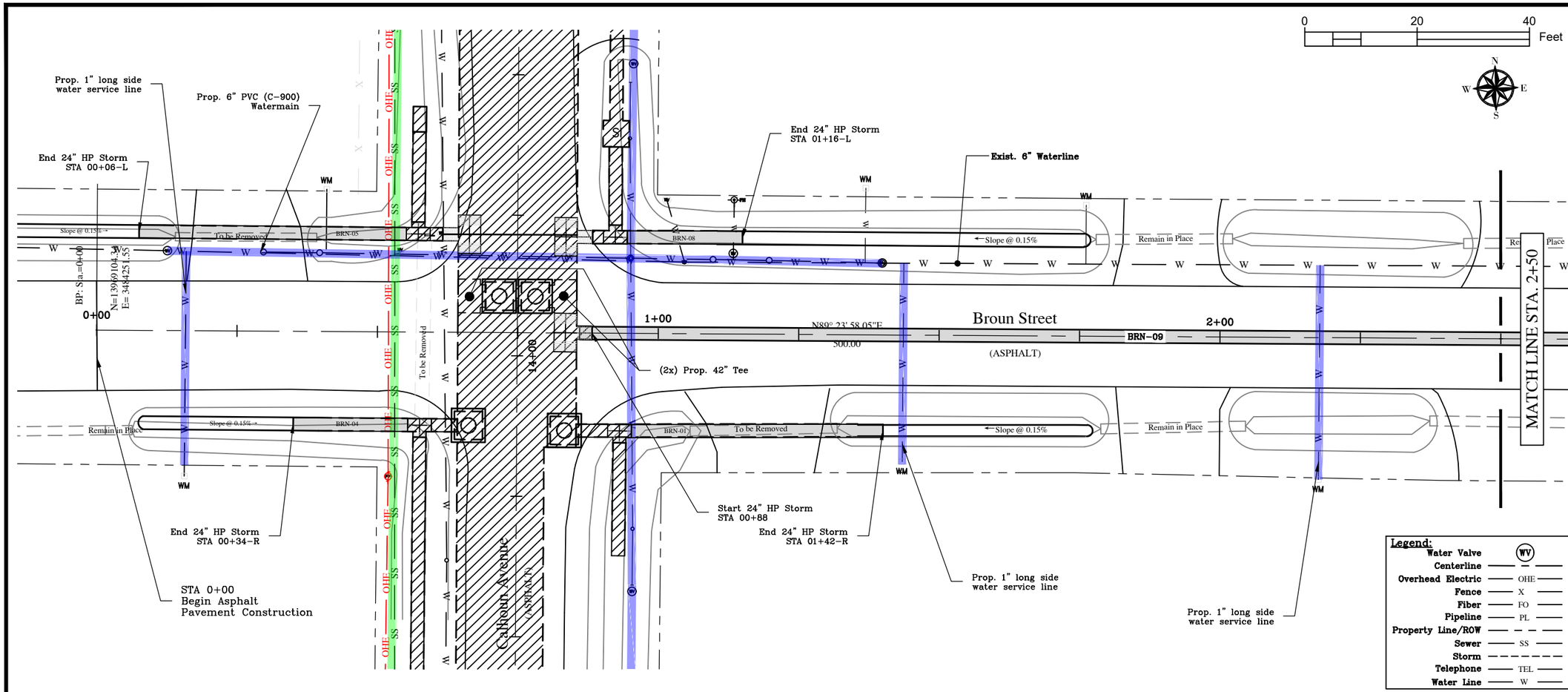

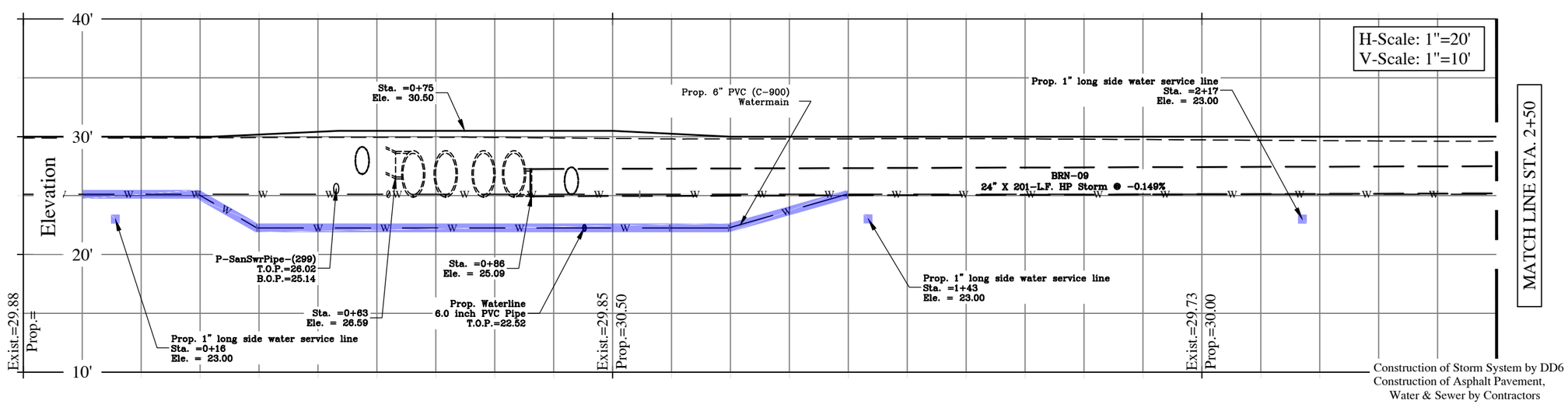

Construction of Storm System by DD6
Construction of Asphalt Pavement,
Water & Sewer by Contractors

PROJECT LOCATION			
CITY	COUNTY	STATE	
BEAUMONT	JEFFERSON	TEXAS	
WATERSHED	DITCH NO.	SHEET	
200	202-E1E	35	

DRAINAGE DISTRICT NO. 6 JEFFERSON COUNTY, TEXAS

PROPOSED UTILITIES & DRAINAGE
BROUN ST.
PLAN AND PROFILE
STA 00+00 to STA 02+50

WALLACE R. WILSON. P.E. No.84857

DATE 10-03-22

STATE OF TEXAS
WALLACE R. WILSON
84857
LICENSED PROFESSIONAL ENGINEER

NO.	DATE	DRN	REVISION	APPROV.
6				
5				
4				
3				
2				
1				

33-43-Prop02 (LW).dwg

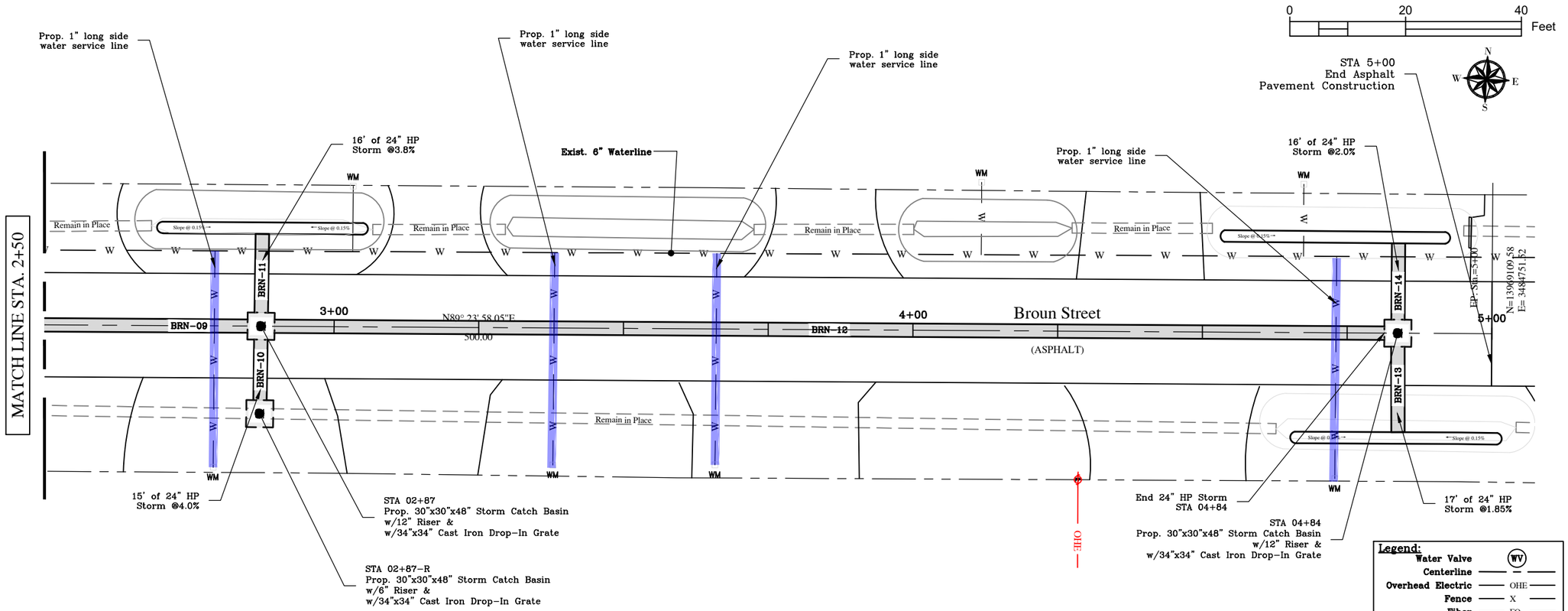

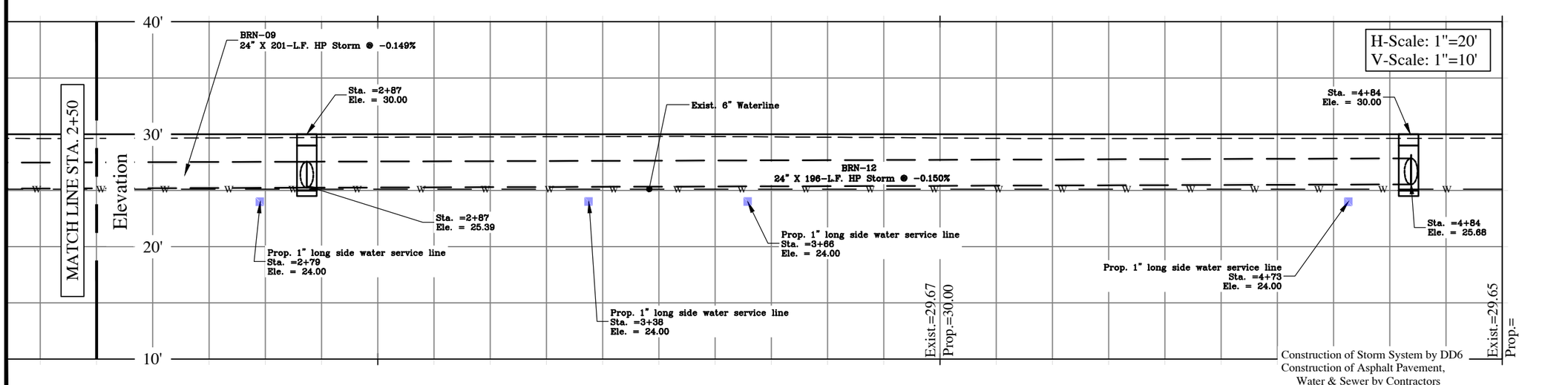

PROJECT LOCATION			
CITY	COUNTY	STATE	
BEAUMONT	JEFFERSON	TEXAS	
WATERSHED	DITCH NO.	SHEET	
200	202-E1E	36	

DRAINAGE DISTRICT NO. 6 JEFFERSON CO. TEXAS

PROPOSED UTILITIES & DRAINAGE
BROUN ST.
PLAN AND PROFILE
STA 02+50 to STA 05+00

WALLACE R. WILSON. P.E. No.84857

DATE 10-03-22

STATE OF TEXAS WALLACE R. WILSON 84857 LICENSED PROFESSIONAL ENGINEER

NO.	DATE	DRN	REVISION	APPROV.
6				
5				
4				
3				
2				
1				

33-43-Prop02 (LW).dwg

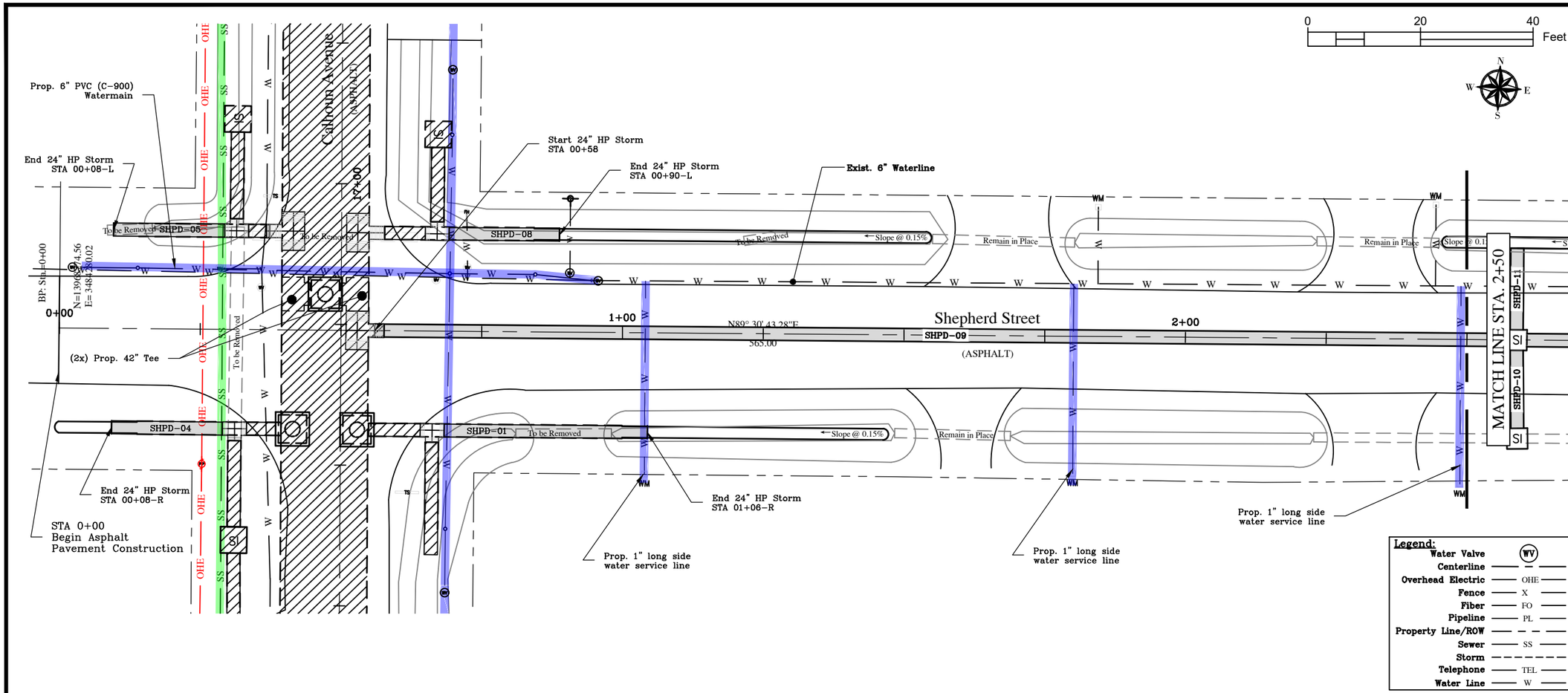

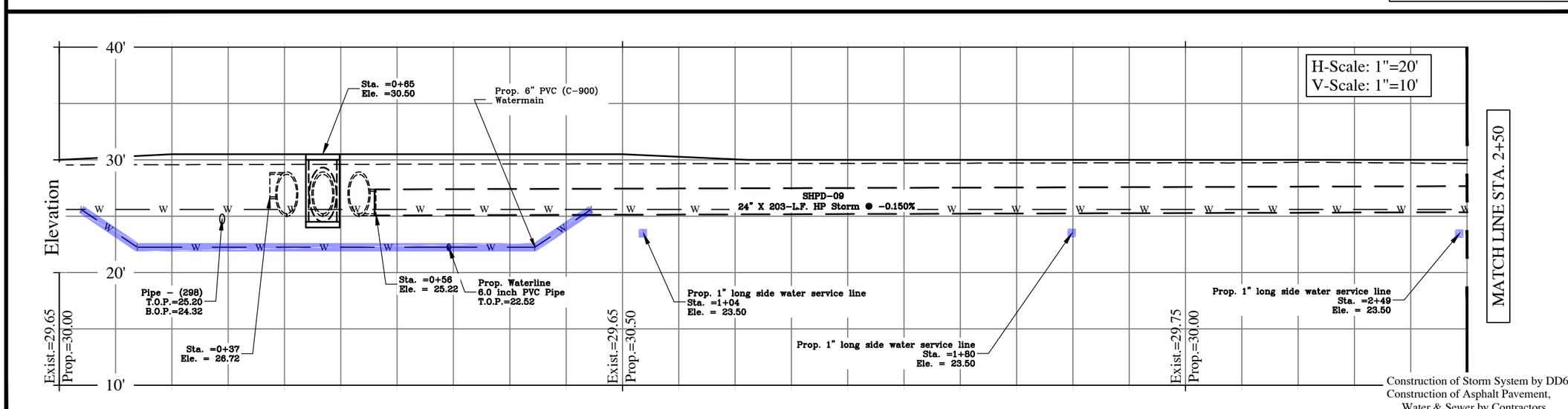

PROJECT LOCATION			
CITY	COUNTY	STATE	
BEAUMONT	JEFFERSON	TEXAS	
WATERSHED	DITCH NO.	SHEET	
200	202-E1E	37	

DRAINAGE DISTRICT NO. 6 JEFFERSON COUNTY, TEXAS

PROPOSED UTILITIES & DRAINAGE
SHEPHERD ST.
PLAN AND PROFILE
STA 00+00 to STA 02+50

WALLACE R. WILSON. P.E. No.84857

DATE 10-03-22

STATE OF TEXAS WALLACE R. WILSON 84857 LICENSED PROFESSIONAL ENGINEER

NO.	DATE	DRN	REVISION	APPROV.
6				
5				
4				
3				
2				
1				

33-43-Prop02 (LW).dwg

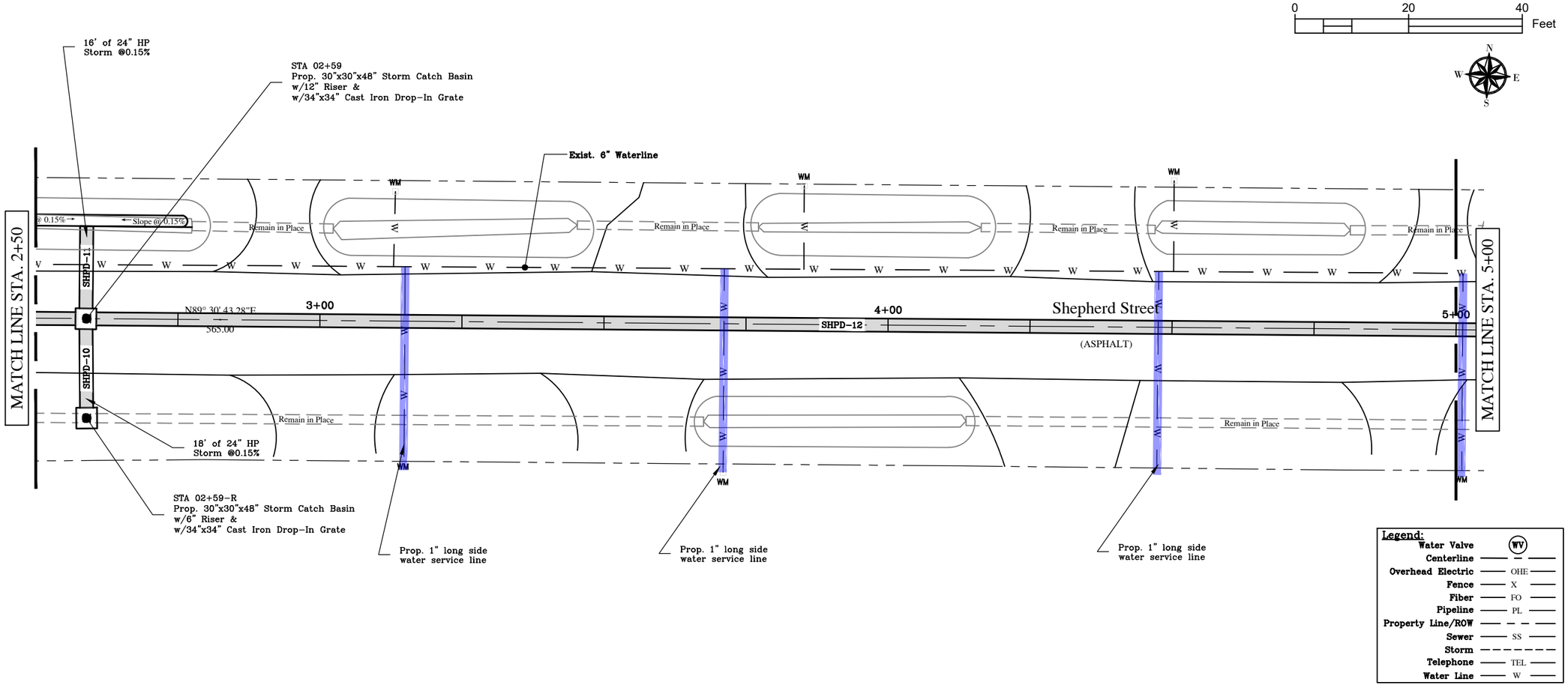

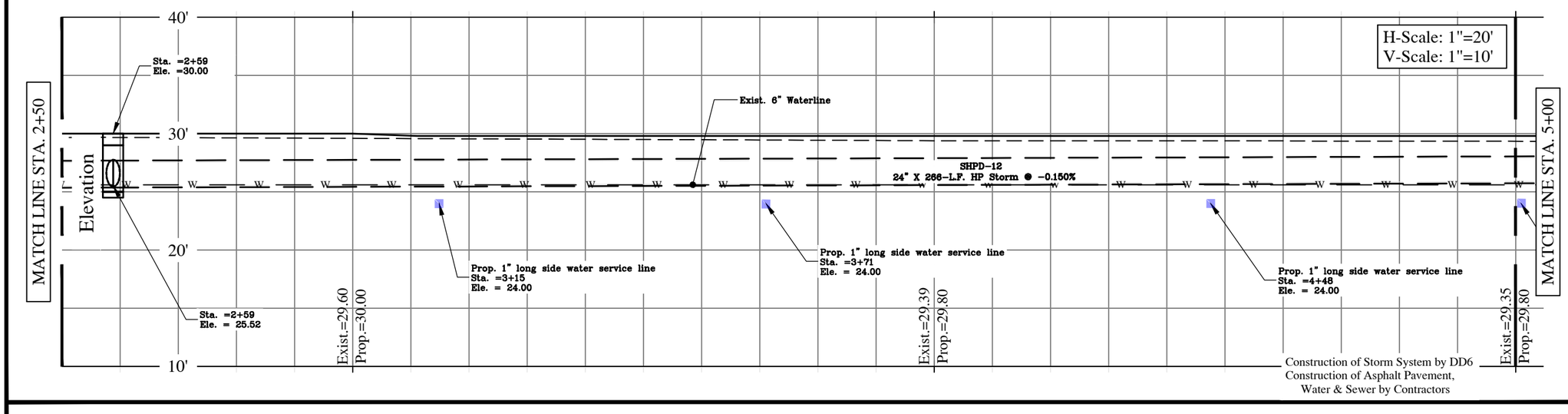

PROJECT LOCATION			
CITY	COUNTY	STATE	
BEAUMONT	JEFFERSON	TEXAS	
WATERSHED	DITCH NO.	SHEET	
200	202-E1E	38	

DRAINAGE DISTRICT NO. 6 JEFFERSON COUNTY, TEXAS

PROPOSED UTILITIES & DRAINAGE
SHEPHERD ST.
PLAN AND PROFILE
STA 02+50 to STA 05+00

WALLACE R. WILSON. P.E. No.84857

DATE 10-03-22

Wallace R. Wilson P.E.

STATE OF TEXAS
WALLACE R. WILSON
84857
LICENSED PROFESSIONAL ENGINEER

NO.	DATE	DRN	REVISION	APPROV.
6				
5				
4				
3				
2				
1				

33-43-Prop02 (LW).dwg

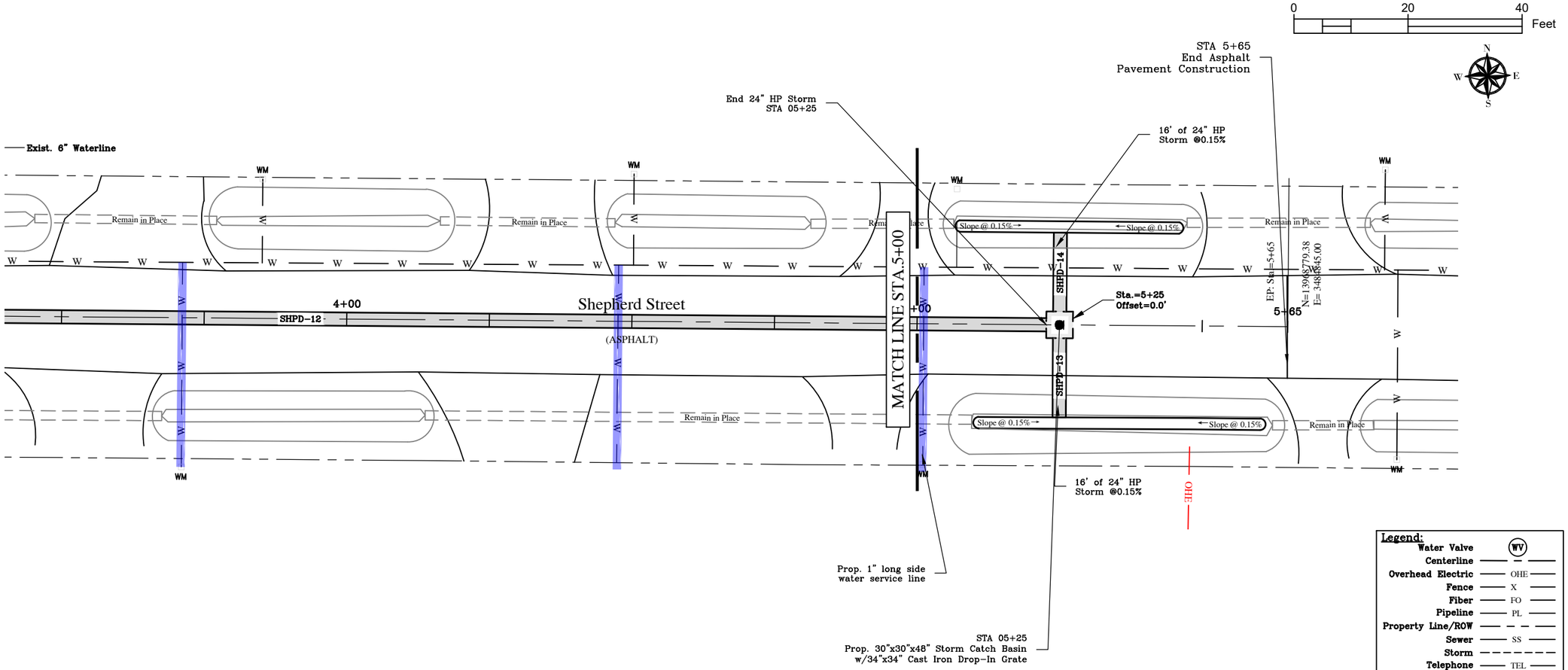

Legend:

Water Valve	WV
Centerline	— —
Overhead Electric	OHE
Fence	X
Fiber	FO
Pipeline	PL
Property Line/ROW	— — —
Sewer	SS
Storm	— — — —
Telephone	TEL
Water Line	W

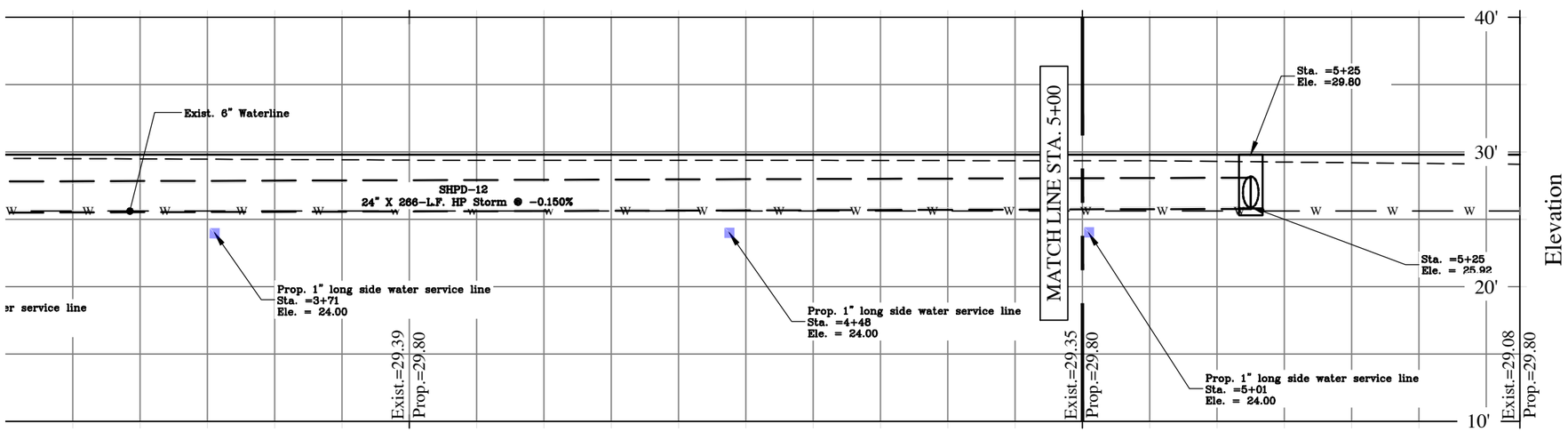

H-Scale: 1"=20'
V-Scale: 1"=10'

Construction of Storm System by DD6
Construction of Asphalt Pavement,
Water & Sewer by Contractors

PROJECT LOCATION			
CITY	COUNTY	STATE	
BEAUMONT	JEFFERSON	TEXAS	
WATERSHED	DITCH NO.	SHEET	
200	202-E1E	39	

DRAINAGE DISTRICT NO. 6 JEFFERSON COUNTY, TEXAS

PROPOSED UTILITIES & DRAINAGE
SHEPHERD ST.
PLAN AND PROFILE
STA 05+00 to STA 05+65

WALLACE R. WILSON. P.E. No.84857

DATE 10-03-22

STATE OF TEXAS
WALLACE R. WILSON
84857
LICENSED PROFESSIONAL ENGINEER

NO.	DATE	DRN	REVISION	APPROV.
6				
5				
4				
3				
2				
1				

33-43-Prop02 (LW).dwg

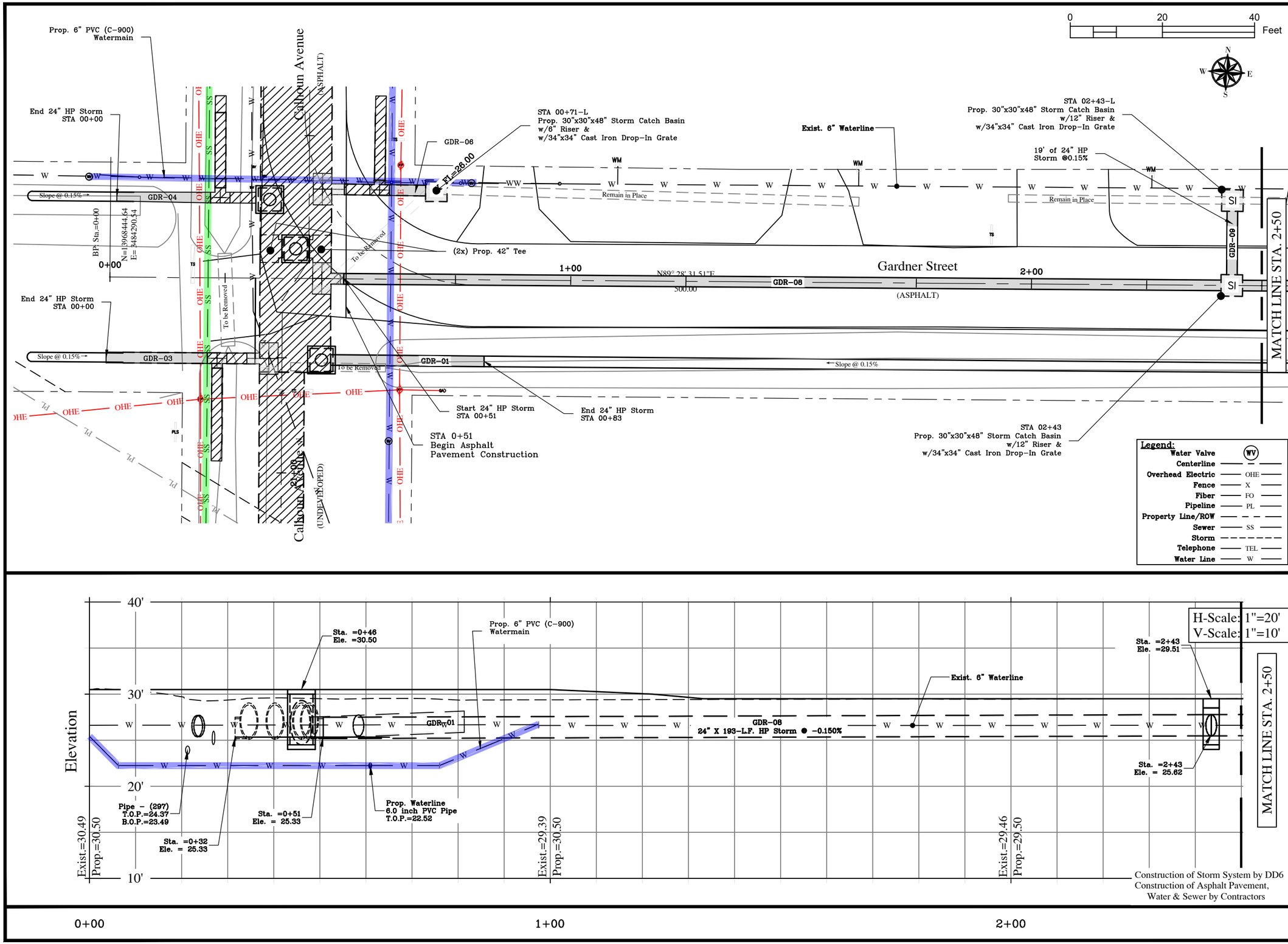

PROJECT LOCATION

CITY	COUNTY	STATE
BEAUMONT	JEFFERSON	TEXAS
WATERSHED	DITCH NO.	SHEET
200	202-E1E	40

DRAINAGE DISTRICT NO. 6 JEFFERSON COUNTY, TEXAS

PROPOSED UTILITIES & DRAINAGE
GARDNER STREET
PLAN AND PROFILE
STA 00+00 to STA 02+50

WALLACE R. WILSON. P.E. No.84857

DATE 10-03-22

STATE OF TEXAS
WALLACE R. WILSON
84857
LICENSED PROFESSIONAL ENGINEER

NO.	DATE	DRN	REVISION	APPROV.
6				
5				
4				
3				
2				
1				

33-43-Prop02 (LW).dwg

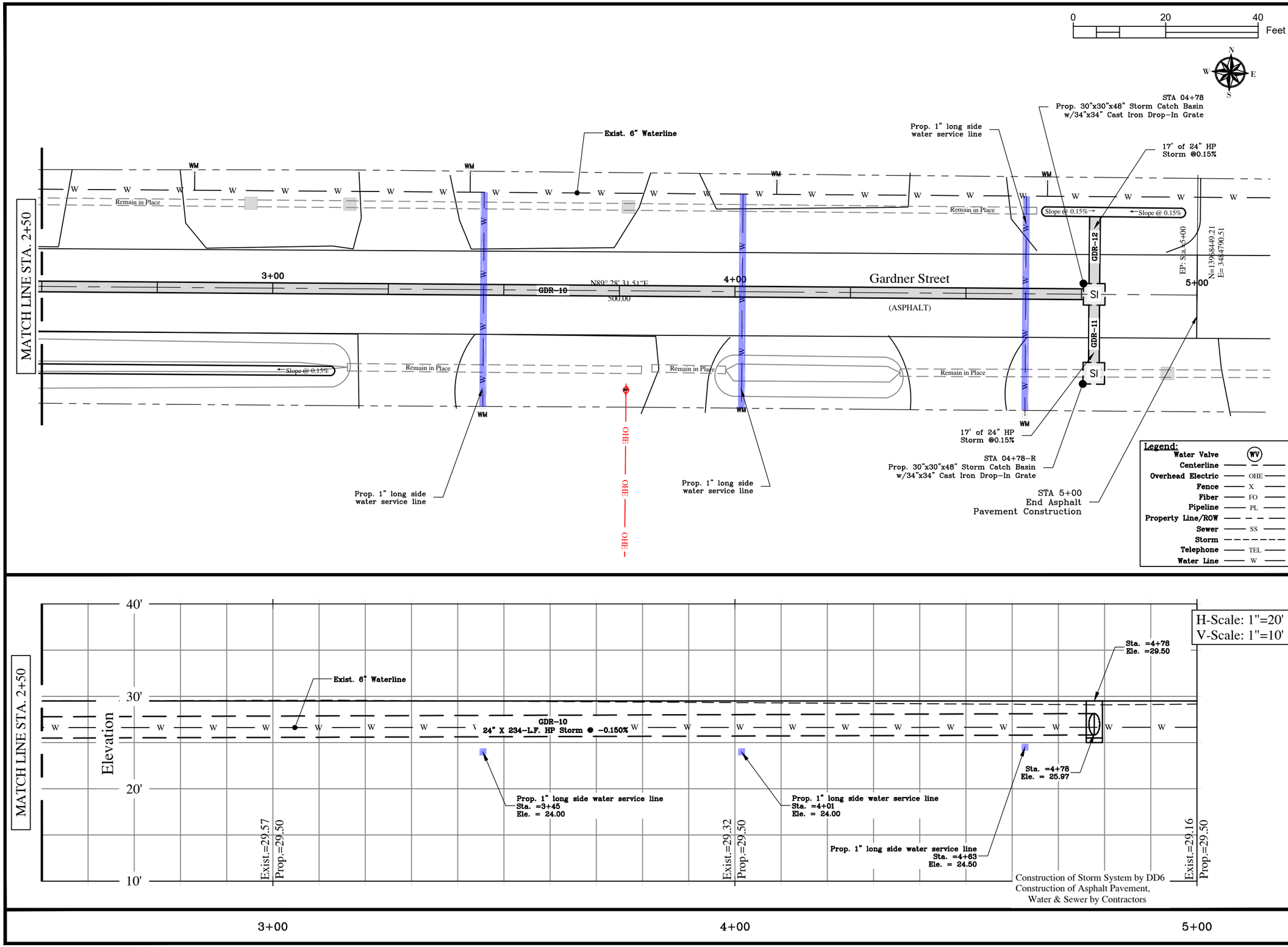

PROJECT LOCATION			
CITY	COUNTY	STATE	
BEAUMONT	JEFFERSON	TEXAS	
WATERSHED	DITCH NO.	SHEET	
200	202-E1E	41	

DRAINAGE DISTRICT NO. 6 JEFFERSON COUNTY, TEXAS

PROPOSED UTILITIES & DRAINAGE
GARDNER STREET
PLAN AND PROFILE
STA 02+50 to STA 05+00

WALLACE R. WILSON. P.E. No.84857

DATE 10-03-22

STATE OF TEXAS
WALLACE R. WILSON
84857
LICENSED PROFESSIONAL ENGINEER

NO.	DATE	DRN	REVISION	APPROV.
6				
5				
4				
3				
2				
1				

33-43-Prop02 (LW).dwg

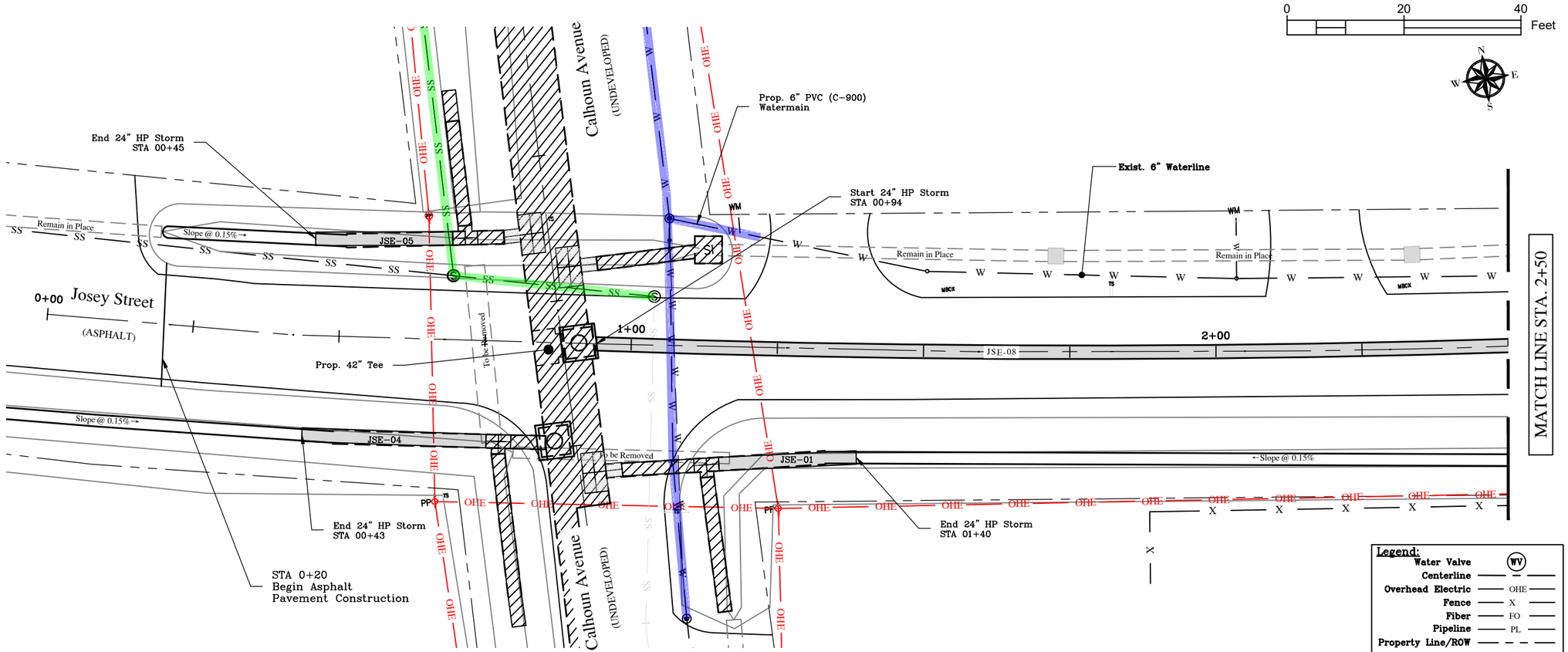

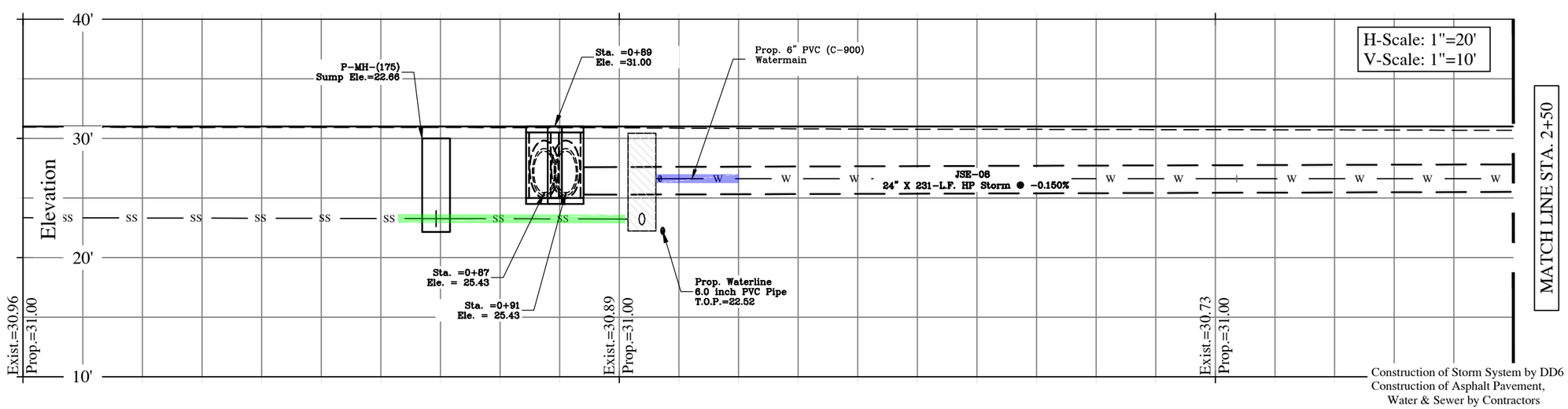

PROJECT LOCATION			
CITY	COUNTY	STATE	
BEAUMONT	JEFFERSON	TEXAS	
WATERSHED	DITCH NO.	SHEET	
200	202-E1E	42	

DRAINAGE DISTRICT NO. 6 JEFFERSON CO., TEXAS

PROPOSED UTILITIES & DRAINAGE
JOSEY STREET
PLAN AND PROFILE
STA 00+00 to STA 02+50

WALLACE R. WILSON. P.E. No.84857

DATE 10-03-22

STATE OF TEXAS
WALLACE R. WILSON
84857
LICENSED PROFESSIONAL ENGINEER

NO.	DATE	DRN	REVISION	APPROV.
6				
5				
4				
3				
2				
1				

33-43-Prop02 (LW).dwg

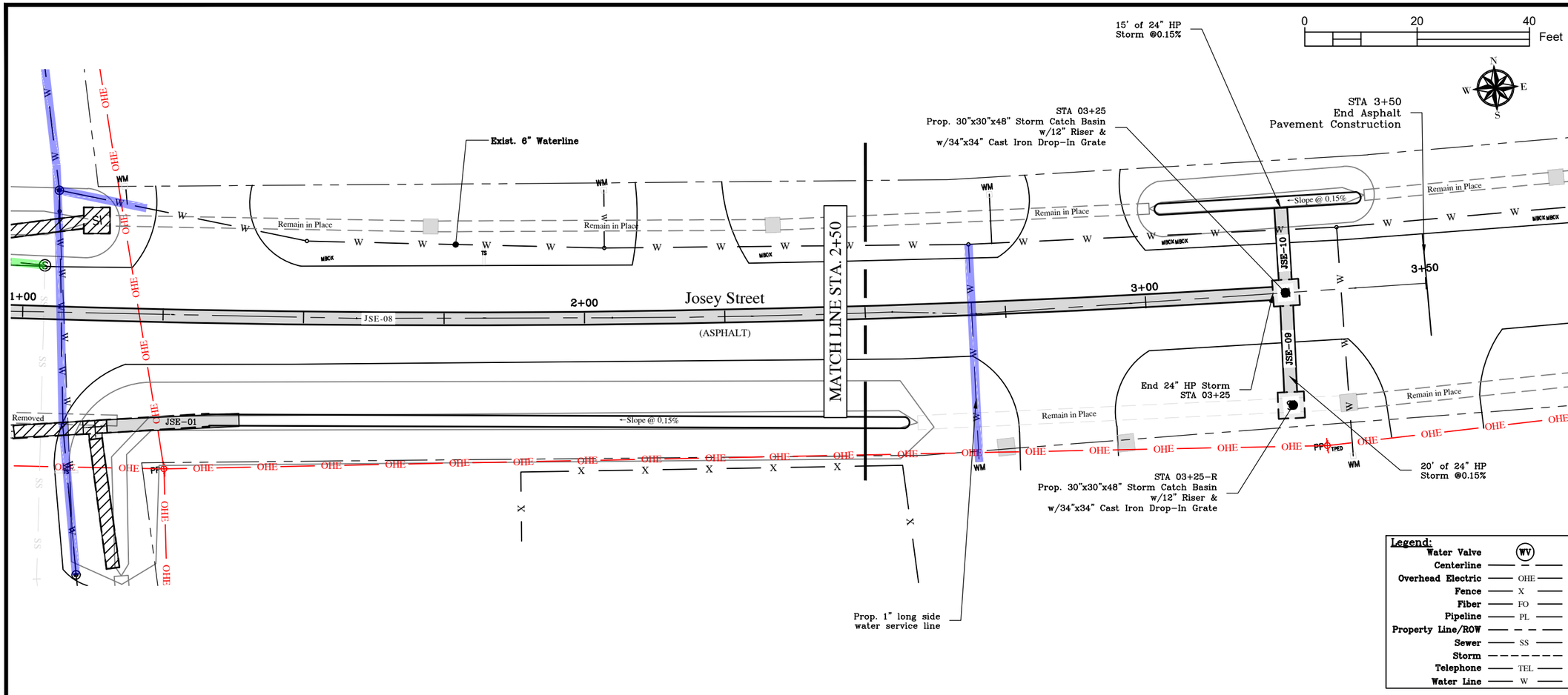

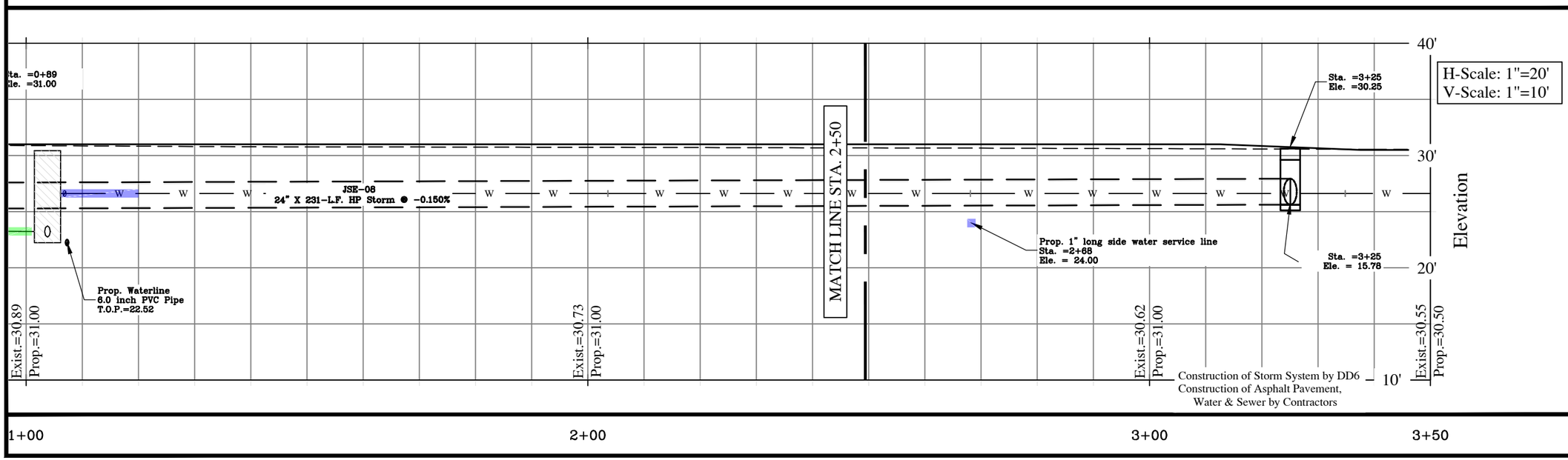

PROJECT LOCATION

CITY	COUNTY	STATE
BEAUMONT	JEFFERSON	TEXAS
WATERSHED	DITCH NO.	SHEET
200	202-E1E	43

DRAINAGE DISTRICT NO. 6 JEFFERSON COUNTY, TEXAS

PROPOSED UTILITIES & DRAINAGE

JOSEY STREET

PLAN AND PROFILE

STA 02+50 to STA 03+50

WALLACE R. WILSON. P.E. No.84857

DATE 10-03-22

STATE OF TEXAS LICENSED PROFESSIONAL ENGINEER WALLACE R. WILSON 84857

NO.	DATE	DRN	REVISION	APPROV.
6				
5				
4				
3				
2				
1				

44-PropDetention-1Acre.dwg

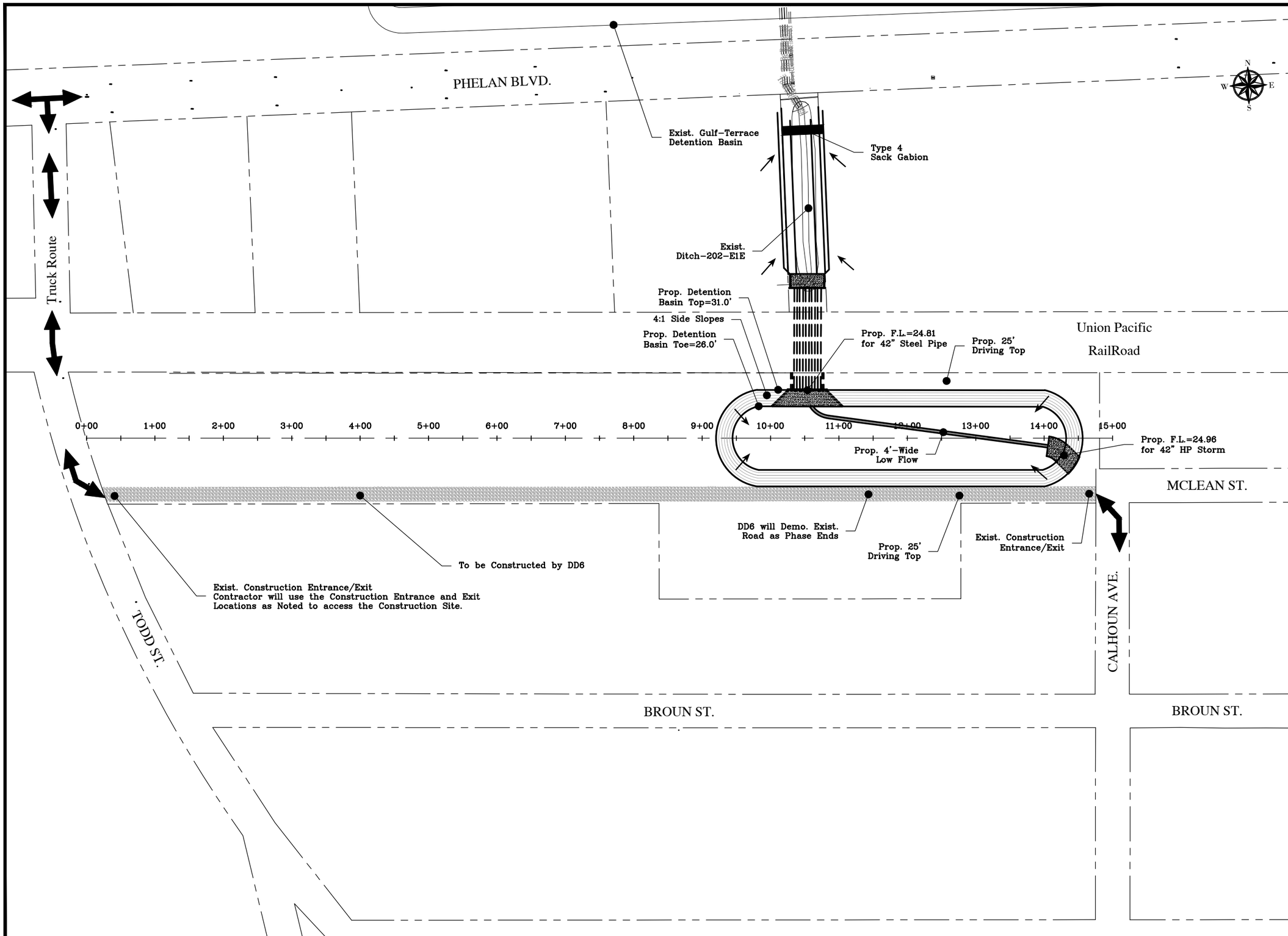

PROJECT LOCATION

CITY	COUNTY	STATE
BEAUMONT	JEFFERSON	TEXAS
WATERSHED	DITCH NO.	SHEET
200	202-E1E	44

DRAINAGE DISTRICT NO. 6 JEFFERSON COUNTY, TEXAS

Mclean Relief Project

Prop. Detention Basin

WALLACE R. WILSON. P.E. No.84857

DATE 10-03-22

STATE OF TEXAS WALLACE R. WILSON 84857 LICENSED PROFESSIONAL ENGINEER

NO.	DATE	DRN	REVISION	APPROV.
6				
5				
4				
3				
2				
1				

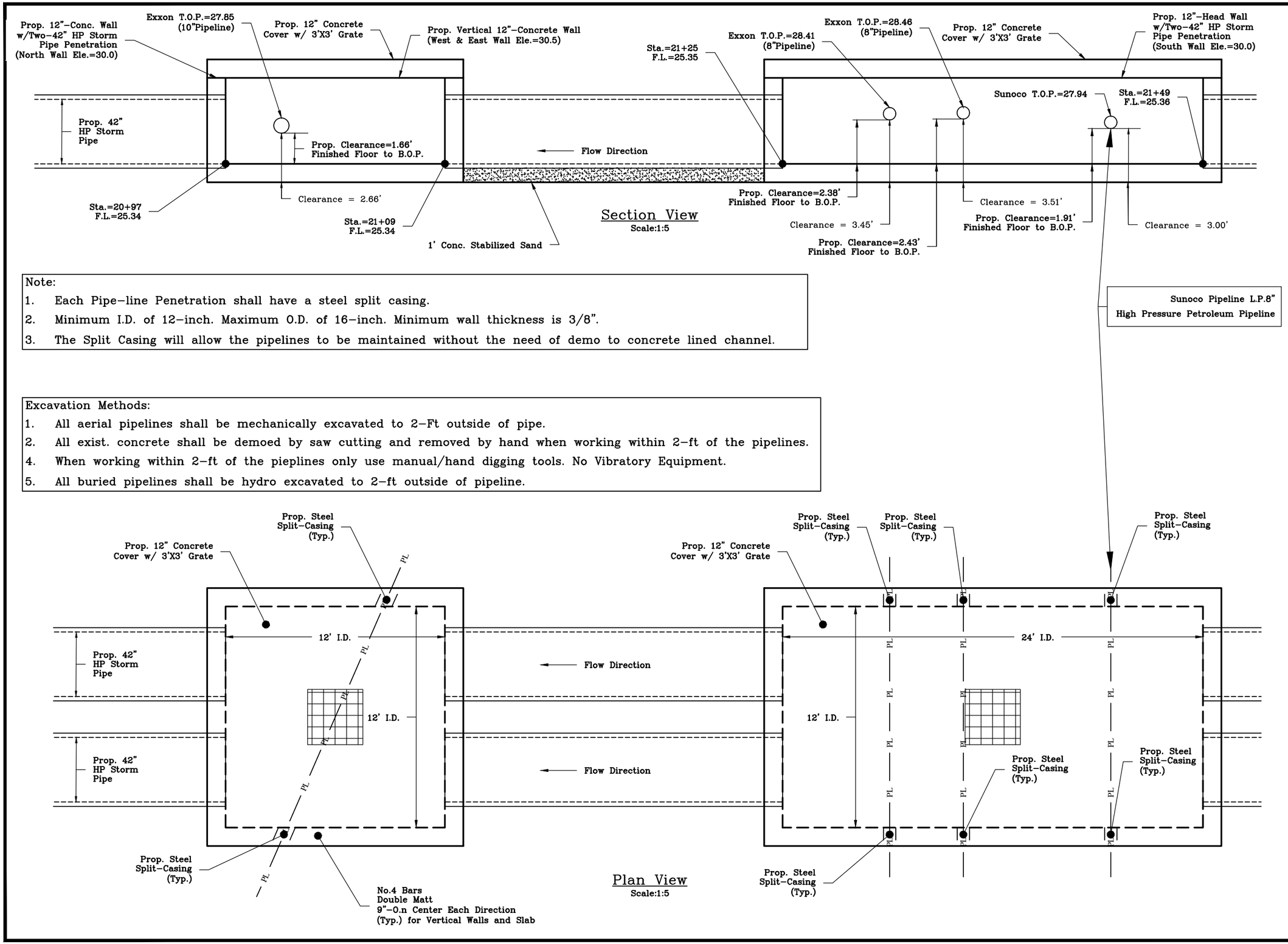

Note:

1. Each Pipe–line Penetration shall have a steel split casing.
2. Minimum I.D. of 12–inch. Maximum O.D. of 16–inch. Minimum wall thickness is 3/8".
3. The Split Casing will allow the pipelines to be maintained without the need of demo to concrete lined channel.

Excavation Methods:

1. All aerial pipelines shall be mechanically excavated to 2–Ft outside of pipe.
2. All exist. concrete shall be demoed by saw cutting and removed by hand when working within 2–ft of the pipelines.
4. When working within 2–ft of the pieplines only use manual/hand digging tools. No Vibratory Equipment.
5. All buried pipelines shall be hydro excavated to 2–ft outside of pipeline.

PROJECT LOCATION

CITY	COUNTY	STATE
BEAUMONT	JEFFERSON	TEXAS
WATERSHED	DITCH NO.	SHEET
200	202–E1E	45

DRAINAGE DISTRICT NO. 6 JEFFERSON COUNTY, TEXAS

Mclean Relief Project

Aerial Pipeline Structure

WALLACE R. WILSON. P.E. No.84857

DATE 10–03–22

STATE OF TEXAS WALLACE R. WILSON 84857 LICENSED PROFESSIONAL ENGINEER

NO.	DATE	DRN	REVISION	APPROV.
6				
5				
4				
3				
2				
1				

TABLE OF DIMENSIONS AND REINFORCING STEEL
(Wings for one structure end)

Dimensions					Variable Reinforcing				Estimated Quantities per ft of wing length (2~wings) (3)	
Maximum Wingwall Height Hw	W	X	Y	Z	Bars J1		Bars J2			
					Size	Spa	Size	Spa	Reinf (Lb/Ft)	Conc (CY/Ft)
2'-6"	2'-5"	1'-0"	9"	7"	#4	1'-0"	#4	1'-0"	33.73	0.248
3'-0"	2'-5"	1'-0"	9"	7"	#4	1'-0"	#4	1'-0"	37.07	0.261
3'-6"	2'-5"	1'-0"	9"	7"	#4	1'-0"	#4	1'-0"	37.74	0.273
4'-0"	2'-5"	1'-0"	9"	7"	#4	1'-0"	#4	1'-0"	38.41	0.285
4'-6"	3'-2"	1'-6"	1'-0"	7"	#4	1'-0"	#4	1'-0"	41.75	0.330
5'-0"	3'-2"	1'-6"	1'-0"	7"	#4	1'-0"	#4	1'-0"	45.09	0.343
5'-6"	3'-2"	1'-6"	1'-0"	7"	#4	1'-0"	#4	1'-0"	45.75	0.355
6'-0"	3'-2"	1'-6"	1'-0"	7"	#4	1'-0"	#4	1'-0"	46.42	0.367
7'-0"	3'-8"	1'-9"	1'-3"	7"	#4	1'-0"	#4	1'-0"	52.77	0.414
8'-0"	4'-2"	2'-0"	1'-6"	8"	#5	1'-0"	#4	1'-0"	60.19	0.486
9'-0"	4'-8"	2'-3"	1'-9"	8"	#4	6"	#4	6"	81.49	0.535
10'-0"	5'-2"	2'-6"	2'-0"	8"	#5	6"	#4	6"	97.25	0.584
11'-0"	5'-8"	2'-9"	2'-3"	8"	#6	6"	#5	6"	133.65	0.634
12'-0"	6'-2"	3'-0"	2'-6"	9"	#7	6"	#5	6"	162.29	0.721
13'-0"	6'-8"	3'-3"	2'-9"	11"	#7	6"	#5	6"	178.80	0.856
14'-0"	7'-2"	3'-6"	3'-0"	1'-0"	#8	6"	#5	6"	216.78	0.959
15'-0"	7'-8"	4'-0"	3'-0"	1'-1"	#9	6"	#6	6"	283.06	1.068
16'-0"	8'-2"	4'-6"	3'-0"	1'-3"	#9	6"	#6	6"	297.02	1.234

TABLE OF WINGWALL REINFORCING
(2~wings)

Bar	Size	No.	Spa
D	#5	~	1'-0"
E	#4	~	1'-0"
F	#4	~	1'-0"
G	#6	4	~
M	#4	4	~
P	#4	~	1'-0"
R	#5	6	~
V	#4	~	1'-0"

TABLE OF ESTIMATED CULVERT TOEWALL QUANTITIES

Bar	Size	No.	Spa
L	#4	~	1'-6"
Q	#4	1	~
Reinf (Lb/Ft)			2.45
Conc (CY/Ft)			0.037

WING DIMENSION FORMULAS:

(All values are in feet.)

Hw = H + T + C - 0.250'
Lw = (Hw - 0.333') (SL)

For cast-in-place culverts:
Ltw = (N) (S) + (N + 1) (U)

For precast culverts:
Ltw = (N) (2U + S) + (N - 1) (0.5')

Total Wingwall Area (two wings ~ SF) = (Hw + 0.333') (Lw)

Hw = Height of wingwall
SL:1 = Side slope ratio (horizontal:1 vertical)
Lw = Length of wingwall
Ltw = Culvert toewall length
N = Number of culvert spans

See applicable box culvert standard sheet for H, S, T, and U values.

(1) Extend Bars P 3'-0" minimum into bottom slab of box culvert.

(2) Adjust as necessary to maintain 1 1#2" clear cover and 4" minimum between bars.

(3) Quantities shown are based on an average wing height for two wings (one structure end). To determine total quantities for two wings, multiply the tabulated values by Lw.

(4) Recommended values of side slope are: 2:1, 3:1, 4:1, and 6:1.

(5) When shown elsewhere on the plans, construct 5" deep concrete riprap. Payment for riprap is as required by Item 432, "Riprap". Unless otherwise shown on the plans or directed by the Engineer, provide a 6" wide by 1'-6" deep reinforced concrete toewall along all edges of the riprap adjacent to natural ground; reinforce the toewall by extending typical riprap reinforcing into the toewall; and extend construction joints or grooved joints oriented in the direction of flow across the full distance of the riprap at intervals of approximately 20'. When such riprap is provided, the culvert toewall shown in SECTION B-B will not be required.

(6) At Contractor's option, culvert toewall may be ended flush with wingwall toewall. Adjust reinforcing as needed.

(7) 0" Min to 5'-0" Max. Estimated curb heights are shown elsewhere in the plans. For structures with pedestrian rail or curbs taller than 1'-0, refer to the Extended Curb Details (ECD) standard sheet. For structures with T631 or T631LS bridge rail, refer to the Mounting Details for T631 & T631LS Rails (T631-CM) standard sheet. Refer to the Box Culvert Rail Mounting Details (RAC) standard sheet for structures with bridge rail other than T631 or T631LS.

(8) For vehicle safety, the following requirements must be met:
- For structures without bridge rail, construct curbs no more than 3" above finished grade.
- For structures with bridge rail, construct curbs flush with finished grade.

Reduce curb heights, if necessary, to meet the above requirements. No changes will be made in quantities and no additional compensation will be allowed for this work.

MATERIAL NOTES:

Provide Class C concrete (f'c=3,600 psi).
Provide Grade 60 reinforcing steel.
Provide galvanized reinforcing steel if required elsewhere in the plans.
In riprap concrete, synthetic fibers listed on the "Fibers for Concrete" Material Producer List (MPL) may be used in lieu of steel reinforcing unless noted otherwise.

GENERAL NOTES:

Designed according to AASHTO LRFD Bridge Design Specifications.
When structure is founded on solid rock, depth of toewalls for culverts and wingwalls may be reduced or eliminated as directed by the Engineer.
See Box Culvert Supplement (BCS) standard sheet for additional dimensions and information.
The quantities for concrete and reinforcing steel resulting from the formulas given on this sheet are for Contractor's information only.

Cover dimensions are clear dimensions, unless noted otherwise. Reinforcing dimensions are out-to-out of bars.

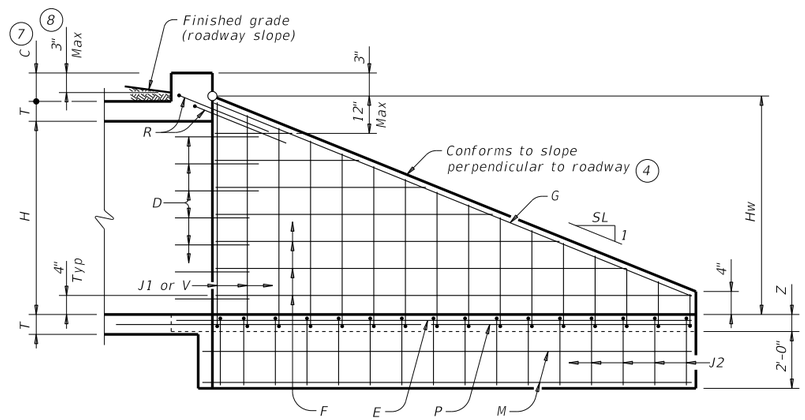

INSIDE ELEVATION

(Showing reinforcing. Culvert and culvert toewall reinforcing not shown for clarity.)

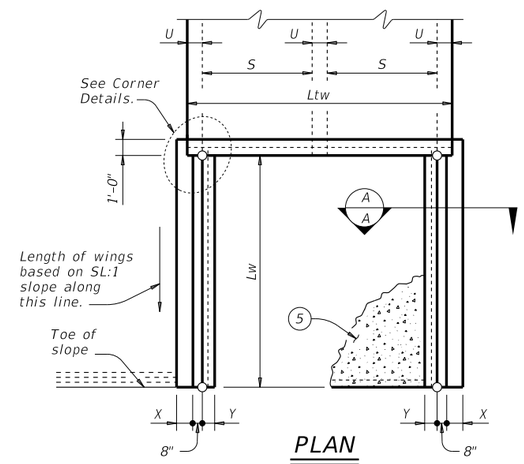

PLAN

(Showing dimensions.)

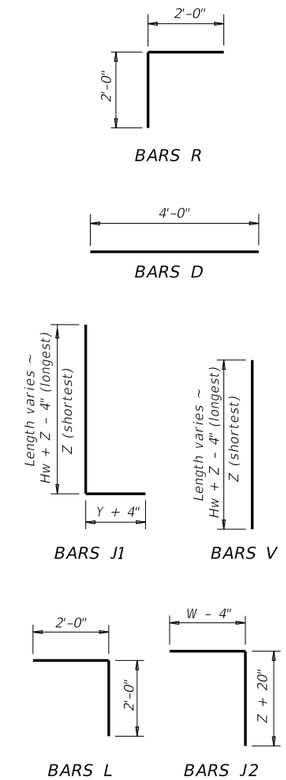

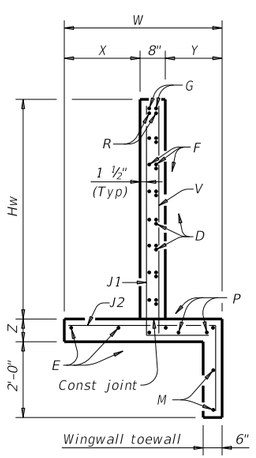

SECTION A-A

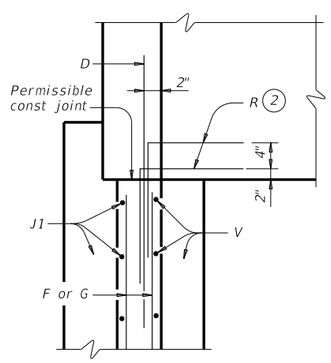

WINGWALL

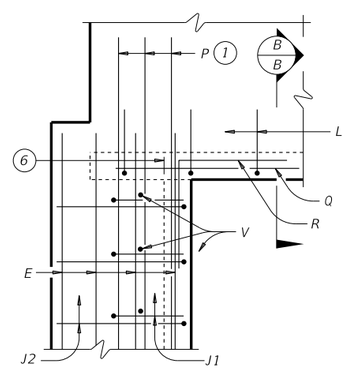

FOOTING AND TOEWALL

CORNER DETAILS

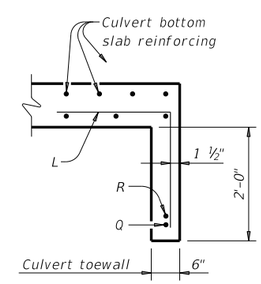

SECTION B-B (5)

Texas Department of Transportation

Bridge Division Standard

CONCRETE WINGWALLS WITH STRAIGHT WINGS FOR 0° SKEW BOX CULVERTS

SW-O

FILE: sw-0stde-20.dgn	DN: GAF	CK: CAT	DW: TxDOT	CK: TxDOT
©TxDOT February 2020	CONT	SECT	JOB	HIGHWAY
REVISIONS				
	DIST	COUNTY		SHEET NO.

DISCLAIMER:
The use of this standard is governed by the "Texas Engineering Practice Act". No warranty of any kind is made by TxDOT for any purpose whatsoever. TxDOT assumes no responsibility for the conversion of this standard to other formats or for incorrect results or damages resulting from its use.

DATE:
FILE:

TABLE OF VARIABLE DIMENSIONS AND QUANTITIES FOR ONE HEADWALL (5)

Slope	Dia of Pipe (D)	Values for One Pipe						Values to be Added for Each Addt'l Pipe		
		W	X	Y	L	Reinf (Lbs)	Conc (CY) (1)	X and W	Reinf (Lbs)	Conc (CY) (1)
2:1	12"	4' - 7 1/2"	2' - 6"	2' - 10"	3' - 3 1/4"	88	0.6	1' - 9"	20	0.2
	15"	5' - 5 3/4"	2' - 9 1/2"	3' - 4"	3' - 10 1/4"	103	0.7	2' - 2"	24	0.3
	18"	6' - 4 1/4"	3' - 1"	3' - 10"	4' - 5"	124	0.9	2' - 8"	32	0.3
	21"	7' - 2 3/4"	3' - 4 1/2"	4' - 4"	5' - 0"	143	1.1	3' - 1"	43	0.4
	24"	8' - 2 1/2"	3' - 9 1/2"	4' - 10"	5' - 7"	164	1.3	3' - 7"	50	0.5
	27"	9' - 1"	4' - 1"	5' - 4"	6' - 2"	179	1.5	3' - 11"	56	0.6
	30"	9' - 11 1/2"	4' - 4 1/2"	5' - 10"	6' - 8 3/4"	203	1.7	4' - 4"	65	0.8
	33"	10' - 10"	4' - 8"	6' - 4"	7' - 3 3/4"	224	2.0	4' - 8"	71	0.9
	36"	11' - 8 1/4"	4' - 11 1/2"	6' - 10"	7' - 10 3/4"	249	2.2	5' - 1"	81	1.0
	42"	13' - 5 1/4"	5' - 6 1/2"	7' - 10"	9' - 0 1/2"	298	2.8	5' - 10"	97	1.3
	48"	15' - 9"	6' - 1 1/2"	9' - 4"	10' - 9 1/4"	360	3.8	6' - 7"	117	1.7
	54"	17' - 5 3/4"	6' - 8 1/2"	10' - 4"	11' - 11 1/4"	427	4.5	7' - 6"	151	2.1
	60"	19' - 2 3/4"	7' - 3 1/2"	11' - 4"	13' - 1"	481	5.3	8' - 3"	174	2.5
	66"	20' - 11 1/2"	7' - 10 1/2"	12' - 4"	14' - 3"	544	6.2	8' - 9"	194	2.9
	72"	22' - 8 1/2"	8' - 5 1/2"	13' - 4"	15' - 4 3/4"	601	7.1	9' - 4"	213	3.3
3:1	12"	6' - 3"	2' - 6"	4' - 3"	4' - 11"	118	0.8	1' - 9"	22	0.2
	15"	7' - 5"	2' - 9 1/2"	5' - 0"	5' - 9 1/4"	137	1.1	2' - 2"	28	0.3
	18"	8' - 6 3/4"	3' - 1"	5' - 9"	6' - 7 3/4"	170	1.3	2' - 8"	37	0.5
	21"	9' - 8 3/4"	3' - 4 1/2"	6' - 6"	7' - 6"	195	1.6	3' - 1"	48	0.6
	24"	11' - 0"	3' - 9 1/2"	7' - 3"	8' - 4 1/2"	227	2.0	3' - 7"	58	0.7
	27"	12' - 2"	4' - 1"	8' - 0"	9' - 2 3/4"	251	2.3	3' - 11"	67	0.8
	30"	13' - 4"	4' - 4 1/2"	8' - 9"	10' - 1 1/4"	293	2.7	4' - 4"	77	1.0
	33"	14' - 5 3/4"	4' - 8"	9' - 6"	10' - 11 3/4"	318	3.1	4' - 8"	84	1.2
	36"	15' - 7 3/4"	4' - 11 1/2"	10' - 3"	11' - 10"	351	3.5	5' - 1"	96	1.4
	42"	17' - 11 1/2"	5' - 6 1/2"	11' - 9"	13' - 6 3/4"	432	4.5	5' - 10"	119	1.7
	48"	21' - 1 3/4"	6' - 1 1/2"	14' - 0"	16' - 2"	537	6.1	6' - 7"	146	2.3
	54"	23' - 5 1/2"	6' - 8 1/2"	15' - 6"	17' - 10 3/4"	630	7.3	7' - 6"	186	2.9
	60"	25' - 9 1/4"	7' - 3 1/2"	17' - 0"	19' - 7 1/2"	719	8.7	8' - 3"	219	3.4
	66"	28' - 1"	7' - 10 1/2"	18' - 6"	21' - 4 1/4"	811	10.1	8' - 9"	242	3.9
	72"	30' - 4 3/4"	8' - 5 1/2"	20' - 0"	23' - 1 1/4"	924	11.7	9' - 4"	272	4.4
4:1	12"	7' - 10 3/4"	2' - 6"	5' - 8"	6' - 6 1/2"	148	1.1	1' - 9"	24	0.3
	15"	9' - 4"	2' - 9 1/2"	6' - 8"	7' - 8 1/2"	181	1.5	2' - 2"	32	0.4
	18"	10' - 9 1/2"	3' - 1"	7' - 8"	8' - 10 1/4"	221	1.9	2' - 8"	42	0.5
	21"	12' - 2 3/4"	3' - 4 1/2"	8' - 8"	10' - 0"	260	2.3	3' - 1"	57	0.7
	24"	13' - 9 1/2"	3' - 9 1/2"	9' - 8"	11' - 2"	301	2.8	3' - 7"	67	0.9
	27"	15' - 3"	4' - 1"	10' - 8"	12' - 3 3/4"	334	3.3	3' - 11"	77	1.0
	30"	16' - 8 1/4"	4' - 4 1/2"	11' - 8"	13' - 5 3/4"	385	3.8	4' - 4"	89	1.3
	33"	18' - 1 3/4"	4' - 8"	12' - 8"	14' - 7 1/2"	425	4.5	4' - 8"	101	1.4
	36"	19' - 7"	4' - 11 1/2"	13' - 8"	15' - 9 1/4"	472	5.1	5' - 1"	115	1.7
	42"	22' - 5 3/4"	5' - 6 1/2"	15' - 8"	18' - 1"	583	6.5	5' - 10"	141	2.1
	48"	26' - 6 1/4"	6' - 1 1/2"	18' - 8"	21' - 6 3/4"	730	8.9	6' - 7"	175	2.8
	54"	29' - 5"	6' - 8 1/2"	20' - 8"	23' - 10 1/4"	875	10.7	7' - 6"	226	3.6
	60"	32' - 3 3/4"	7' - 3 1/2"	22' - 8"	26' - 2"	996	12.7	8' - 3"	264	4.3
	66"	35' - 2 1/2"	7' - 10 1/2"	24' - 8"	28' - 5 3/4"	1,140	14.9	8' - 9"	300	4.9
	72"	38' - 1 1/4"	8' - 5 1/2"	26' - 8"	30' - 9 1/2"	1,297	17.3	9' - 4"	334	5.6
6:1	12"	11' - 2"	2' - 6"	8' - 6"	9' - 9 3/4"	224	1.9	1' - 9"	28	0.4
	15"	13' - 2 1/4"	2' - 9 1/2"	10' - 0"	11' - 6 1/2"	268	2.5	2' - 2"	37	0.5
	18"	15' - 2 1/2"	3' - 1"	11' - 6"	13' - 3 1/4"	330	3.2	2' - 8"	50	0.7
	21"	17' - 2 3/4"	3' - 4 1/2"	13' - 0"	15' - 0 1/4"	387	3.9	3' - 1"	69	0.9
	24"	19' - 4 1/2"	3' - 9 1/2"	14' - 6"	16' - 9"	453	4.8	3' - 7"	80	1.2
	27"	21' - 4 3/4"	4' - 1"	16' - 0"	18' - 5 3/4"	512	5.7	3' - 11"	96	1.4
	30"	23' - 5 1/4"	4' - 4 1/2"	17' - 6"	20' - 2 1/2"	593	6.7	4' - 4"	110	1.7
	33"	25' - 5 1/2"	4' - 8"	19' - 0"	21' - 11 1/4"	675	7.8	4' - 8"	127	2.0
	36"	27' - 5 3/4"	4' - 11 1/2"	20' - 6"	23' - 8"	735	9.0	5' - 1"	144	2.3
	42"	31' - 6 1/4"	5' - 6 1/2"	23' - 6"	27' - 1 1/2"	922	11.5	5' - 10"	179	3.0
	48"	37' - 3 1/2"	6' - 1 1/2"	28' - 0"	32' - 4"	1,191	15.9	6' - 7"	231	4.0
	54"	41' - 4 1/4"	6' - 8 1/2"	31' - 0"	35' - 9 1/2"	1,424	19.2	7' - 6"	300	5.0
	60"	45' - 4 3/4"	7' - 3 1/2"	34' - 0"	39' - 3"	1,631	22.9	8' - 3"	353	6.0

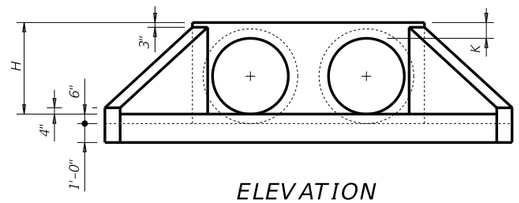

ELEVATION

(Showing dimensions.)

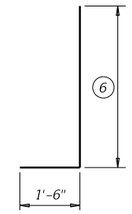

BARS V

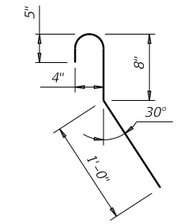

BARS CL

(Length = 2'-5")

TABLE OF (5) REINFORCING STEEL

Bar	Size	Spa	No.
A	#4	1' - 0"	~
B	#3	1' - 6"	~
C	#4	1' - 0"	~
D	#3	1' - 0"	~
E	#5	~	4
F	#5	~	~
G	#3	~	2
S	#4	~	6
V	#4	1' - 0"	~
W	#5	~	4

TABLE OF CONSTANT DIMENSIONS

Dia of Pipe (D)	G	K (4)	H
12"	0' - 9"	1' - 0"	2' - 0"
15"	0' - 11"	1' - 0"	2' - 3"
18"	1' - 2"	1' - 0"	2' - 6"
21"	1' - 4"	1' - 0"	2' - 9"
24"	1' - 7"	1' - 0"	3' - 0"
27"	1' - 8"	1' - 0"	3' - 3"
30"	1' - 10"	1' - 0"	3' - 6"
33"	1' - 11"	1' - 0"	3' - 9"
36"	2' - 1"	1' - 0"	4' - 0"
42"	2' - 4"	1' - 0"	4' - 6"
48"	2' - 7"	1' - 3"	5' - 3"
54"	3' - 0"	1' - 3"	5' - 9"
60"	3' - 3"	1' - 3"	6' - 3"
66"	3' - 3"	1' - 3"	6' - 9"
72"	3' - 4"	1' - 3"	7' - 3"

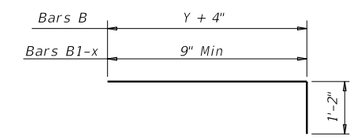

BARS B and B1-x

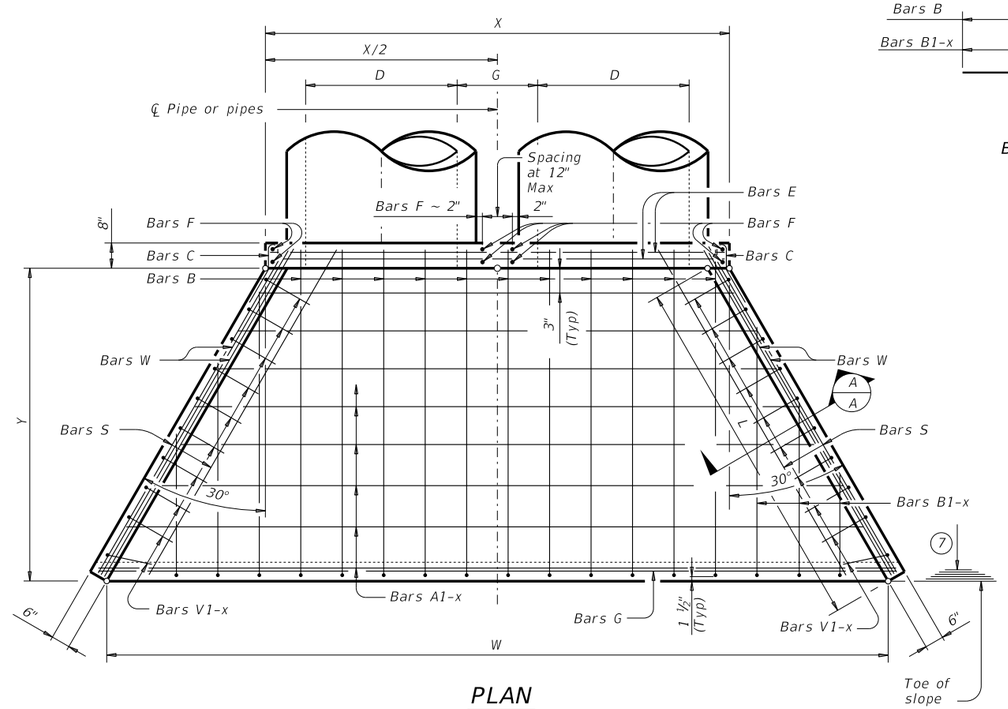

PLAN

(1) Quantities shown are for concrete pipe and will increase slightly for metal pipe installations.

(2) For vehicle safety, construct curbs no more than 3" above finished grade. Reduce curb heights, if necessary, to meet these requirements. No changes will be made in quantities and no additional compensation will be allowed for this work.

(3) Provide a 1'-0" footing as shown where required to maintain 4" minimum cover for pipes.

(4) Dimensions shown are usual and maximum.

(5) Quantities shown are for one structure end only (one headwall).

(6) Min Length = 6" + 3" x $\left(\frac{12 \times H - 7}{12 \times L}\right)$

Max Length = 12 x H - 3" x $\left(\frac{12 \times H - 7}{12 \times L}\right)$ - 1"

(7) Lengths of wings based on SL:1 slope along this line.

MATERIAL NOTES:

Provide Grade 60 reinforcing steel.
Provide Class C concrete (f'c = 3,600 psi).

GENERAL NOTES:

Designed according to AASHTO LRFD Bridge Design Specifications.

Do not mount bridge rails of any type directly to these culvert headwalls.

This standard may not be used for wall heights, H, exceeding the values shown.

Cover dimensions are clear dimensions, unless noted otherwise. Reinforcing dimensions are out-to-out of bars.

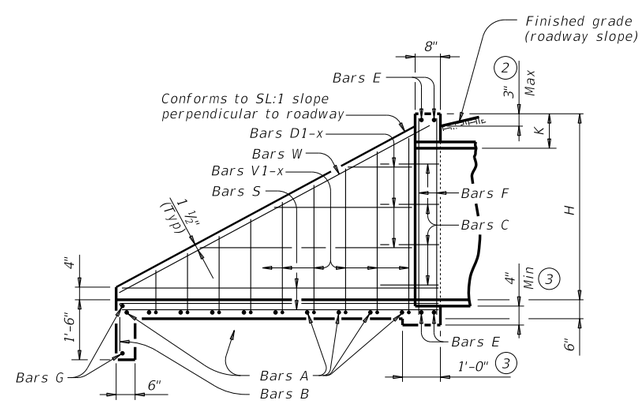

TYPICAL WING ELEVATION

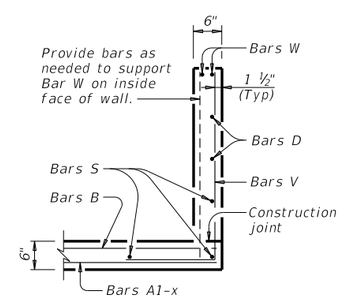

SECTION A-A

Texas Department of Transportation

Bridge Division Standard

CONCRETE HEADWALLS WITH FLARED WINGS FOR 0° SKEW PIPE CULVERTS

CH-FW-0

FILE: chfw00se-20.dgn	DN: TxDOT	CK: TxDOT	DW: TxDOT	CK: TxDOT
©TxDOT February 2020	CONT	SECT	JOB	HIGHWAY
REVISIONS	DIST		COUNTY	SHEET NO.

DISCLAIMER:
The use of this standard is governed by the "Texas Engineering Practice Act". No warranty of any kind is made by TxDOT for any purpose whatsoever. TxDOT assumes no responsibility for the conversion of this standard to other formats or for incorrect results or damages resulting from its use.

DATE:
FILE:

Size (Y)	N	MH Dia (2)
3'	9"	18"
4'	16"	32"
5'	16"	32"
6'	16"	32"

BAR TABLE	
BAR	SIZE
A1	#3
A2	#3
A3 (1)	#3
A4 (1)	#3
B1	#4
B2	#4
B3 (1)	#4
C (1)	#4
G	#4
L (1)	#5
Ra	#5
U1 (1)	#5
U2 (1)	#5

(1) Reinforcing bar used only with extension(s).

(2) Nominal ring and cover size.

(3) Matches inside face of wall of precast base or precast riser or precast slab lid (PSL) style "S1" below inlet.

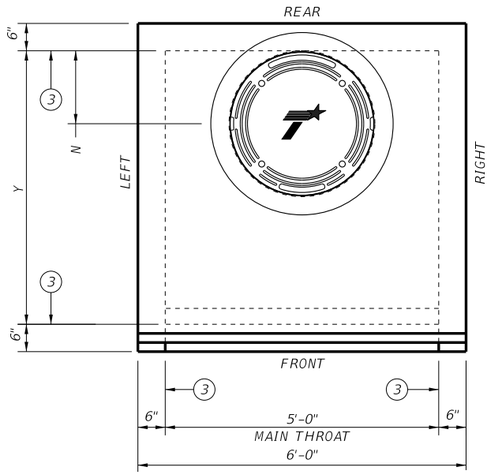

PLAN VIEW

(Shown without extensions.)
See SHEET 2 OF 4 for details.

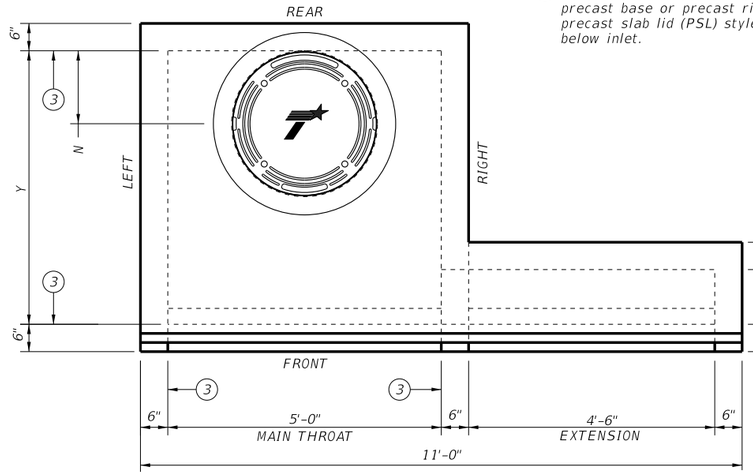

PLAN VIEW

(Showing one extension.)
See SHEET 3 OF 4 for details.

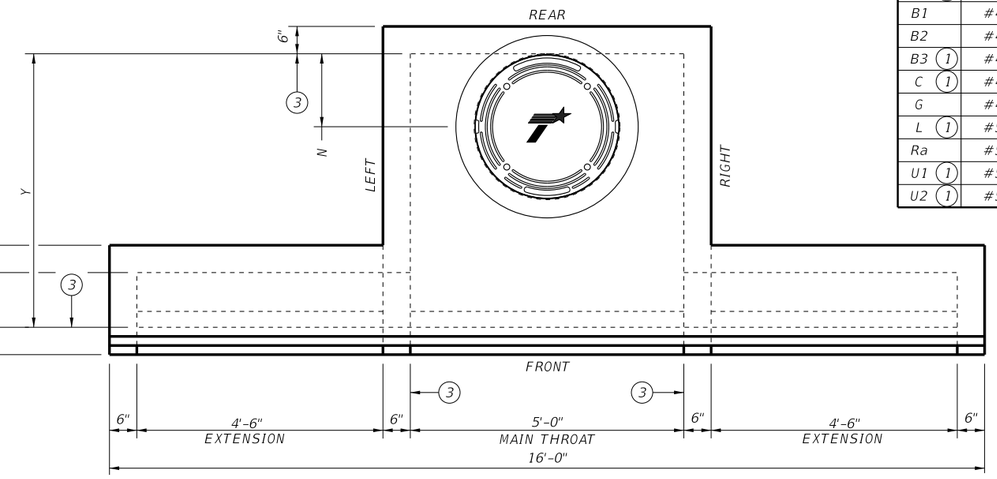

PLAN VIEW

(Showing extension on each side)
See SHEET 4 OF 4 for details.

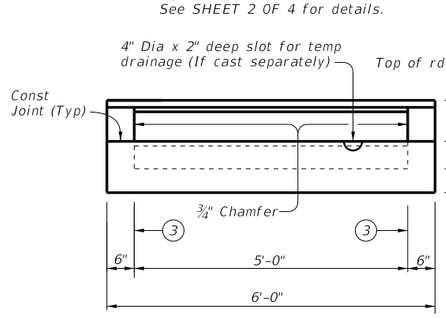

FRONT VIEW

(Shown without extensions.)
See SHEET 2 OF 4 for details.

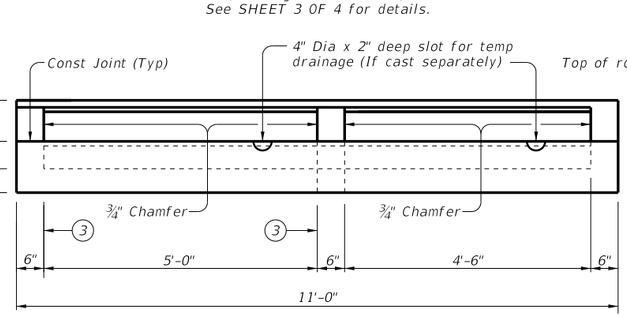

FRONT VIEW

(Showing one extension.)
See SHEET 3 OF 4 for details.

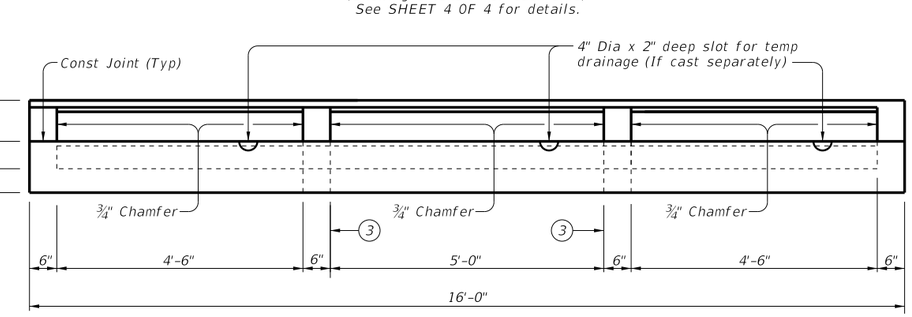

FRONT VIEW

(Showing extension on each side.)
See SHEET 4 OF 4 for details.

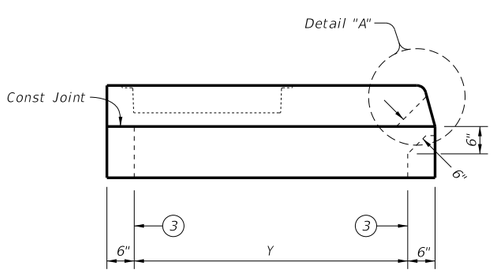

LEFT SIDE VIEW

(Extensions not shown for clarity.)

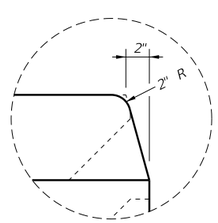

DETAIL "A"

CONSTRUCTION NOTES:

Chamfer all vertical edges of inlet lid ¾" as shown in Front View, Sheet 1 of 4.

Maintain 1 ½" clear cover to ends of all vertical reinforcing bars, unless otherwise noted.

MATERIAL NOTES:

Provide Class "S" concrete (f'c = 4,000 psi).
Provide Grade 60 reinforcing steel or equivalent area of WWR.
Provide cast iron solid cover, unless noted otherwise elsewhere in the plans.

GENERAL NOTES:

Designed according to AASHTO LRFD Bridge Design Specifications.
The intent of this standard is to provide a cast-in-place lid to be used with precast base, precast riser or precast slab lid style "S1".
Inlet throat and lid are not intended for direct traffic. Do not place in roadway.
Lid and throat may be cast monolithically or separately.
See Precast Base (PB) standard for details and notes not shown.
See Precast Slab Lid (PSL) standard for details and notes not shown.
See Curb & Gutter Transitions Details (CGT-PCO) standard for transition examples.
Extensions may be right, left, both, or none. Provide extensions as specified elsewhere in the plans.
Shop drawings for approval are not required.
Payment for inlet is per Item 465, "Junction Boxes, Manholes, and Inlets" by type, size, and extension placement. Extensions are subsidiary to inlet.
Open area of main throat = 360 sq in.
Open area of one extension throat = 324 sq in.

Cover dimensions are clear dimensions, unless noted otherwise.
Reinforcing bar dimensions shown are out-to-out of bar.

DISCLAIMER:
The use of this standard is governed by the "Texas Engineering Practice Act". No warranty of any kind is made by TxDOT for any purpose whatsoever. TxDOT assumes no responsibility for the conversion of this standard to other formats or for incorrect results or damages resulting from its use.

HL93 LOADING — SHEET 1 OF 4

Texas Department of Transportation — Bridge Division Standard

CAST-IN-PLACE CURB INLET OUTSIDE ROADWAY

CCO

FILE: ccostds1-20.dgn	DN: TxDOT	CK: TxDOT	DW: TxDOT	CK: TxDOT
©TxDOT February 2020	CONT	SECT	JOB	HIGHWAY
REVISIONS	DIST		COUNTY	SHEET NO.

DATE:
FILE:

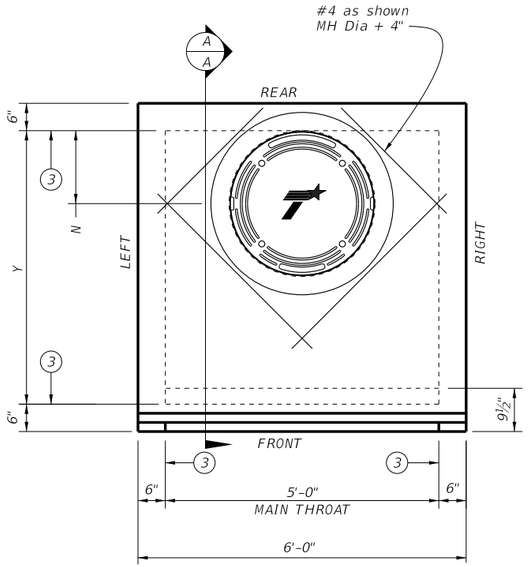

LID PLAN VIEW

(Shown without extensions)

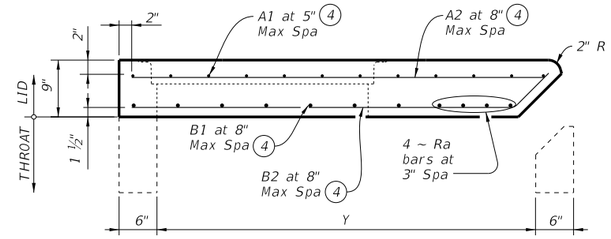

LID SECTION A-A

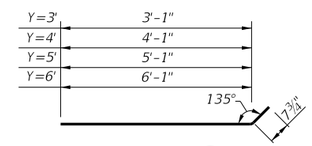

BARS B2 4

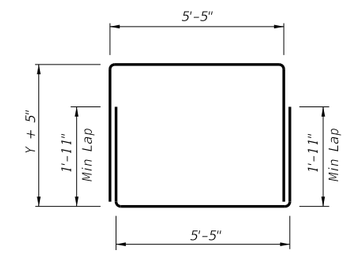

BARS G

Showing one complete bar.

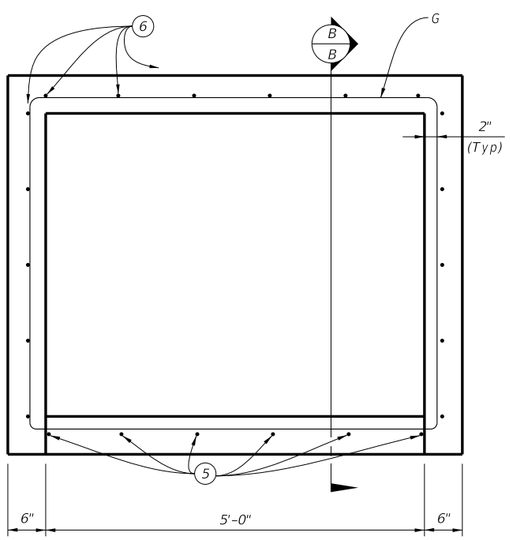

THROAT PLAN VIEW

(Shown without extensions)

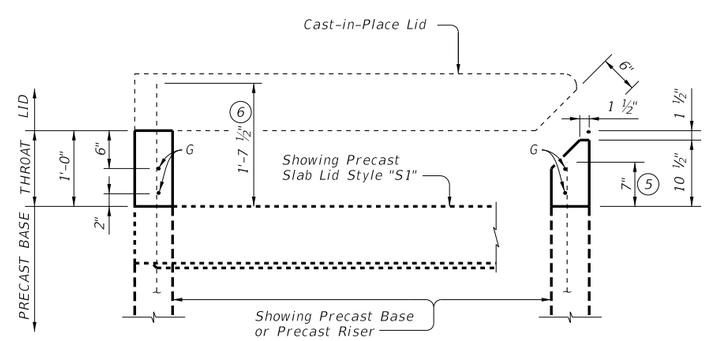

THROAT SECTION B-B

(Showing reinforcing bar extended from pecast base or precast riser or precast slab lid style "S1".)

3 Matches inside face of wall of precast base or precast riser or precast slab lid style "S1" below inlet.

4 Cut reinforcing bars as needed to provide 1 ½" clear to manhole.

5 Extend reinforcing bars from precast base or precast riser or precast slab lid style "S1" 7".

6 Extend reinforcing bars from precast base or precast riser or precast slab lid style "S1" 1'-7 ½".

HL93 LOADING

SHEET 2 OF 4

Texas Department of Transportation

Bridge Division Standard

CAST-IN-PLACE CURB INLET OUTSIDE ROADWAY

CCO

FILE: ccostds1-20.dgn	DN: TxDOT	CK: TxDOT	DW: TxDOT	CK: TxDOT
©TxDOT February 2010	CONT	SECT	JOB	HIGHWAY
REVISIONS				
	DIST	COUNTY		SHEET NO.

DISCLAIMER:
The use of this standard is governed by the "Texas Engineering Practice Act". No warranty of any kind is made by TxDOT for any purpose whatsoever. TxDOT assumes no responsibility for the conversion of this standard to other formats or for incorrect results or damages resulting from its use.

DATE:
FILE:

DISCLAIMER:
The use of this standard is governed by the "Texas Engineering Practice Act". No warranty of any kind is made by TxDOT for any purpose whatsoever. TxDOT assumes no responsibility for the conversion of this standard to other formats or for incorrect results or damages resulting from its use.

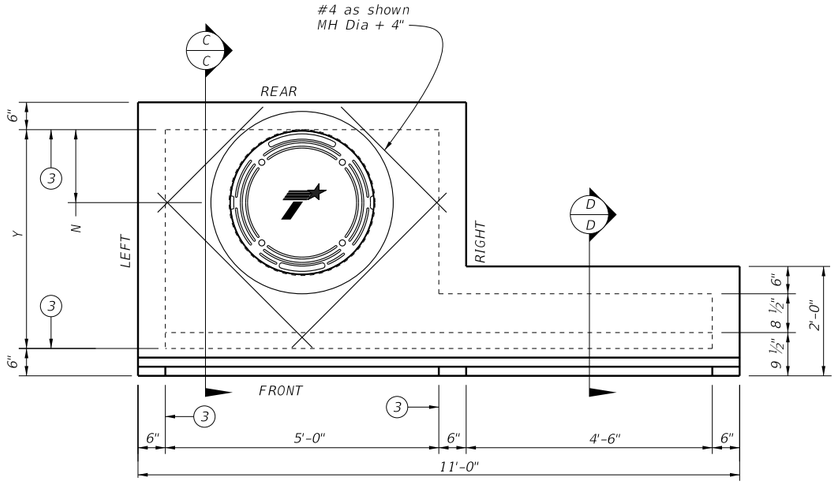

LID PLAN VIEW

(Showing one extension.)

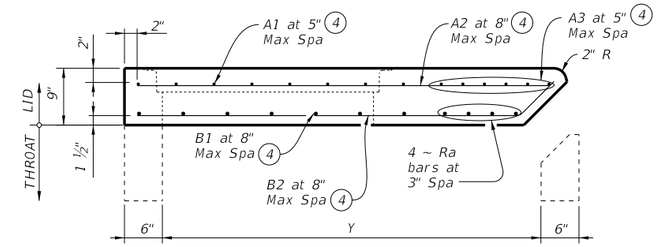

LID SECTION C-C

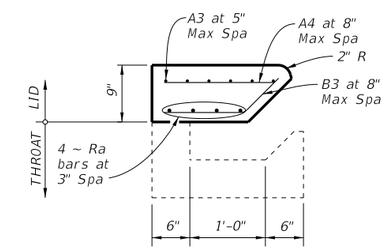

LID SECTION D-D

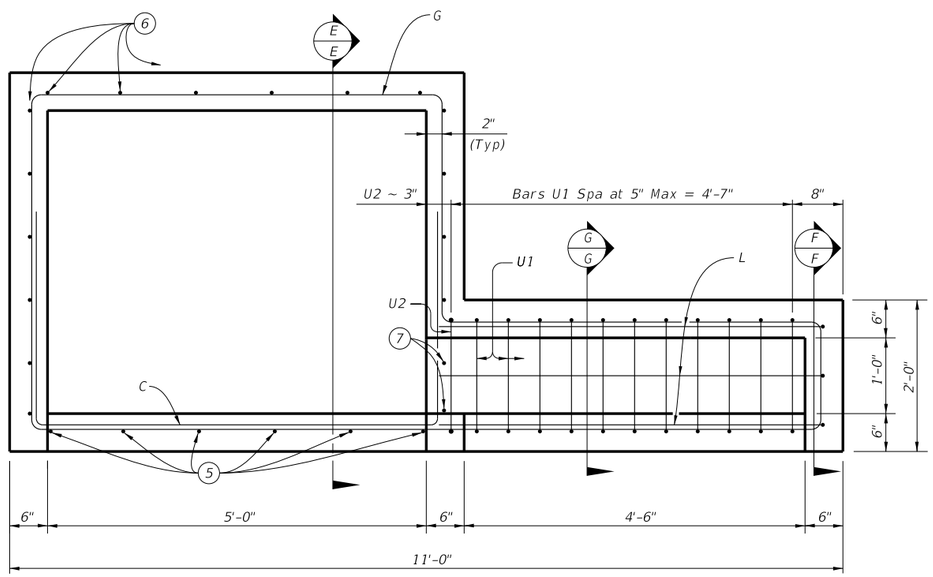

THROAT PLAN VIEW

(Showing one extension.)

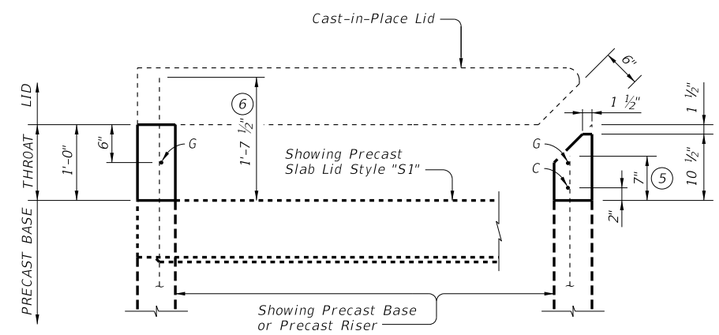

THROAT SECTION E-E

(Showing reinforcing bar extended from pecast base or precast riser or precast slab lid style "S1".)

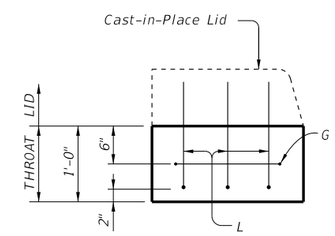

THROAT SECTION F-F

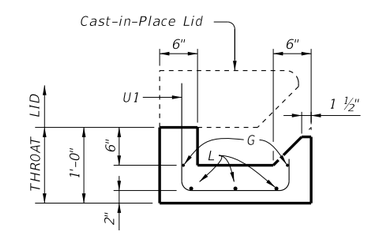

BARS U1 LOCATION

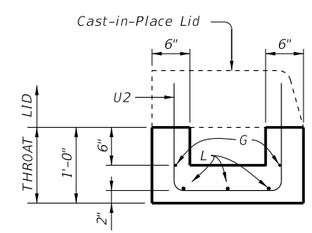

BARS U2 LOCATION

THROAT SECTION G-G

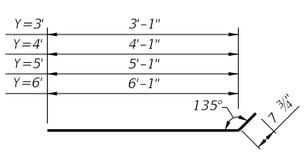

BARS B2 (4)

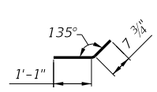

BARS B3

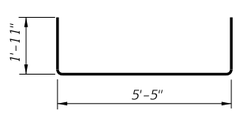

BARS C

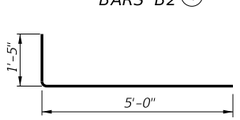

BARS L

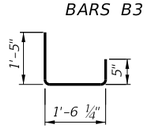

BARS U1

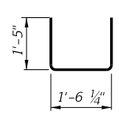

BARS U2

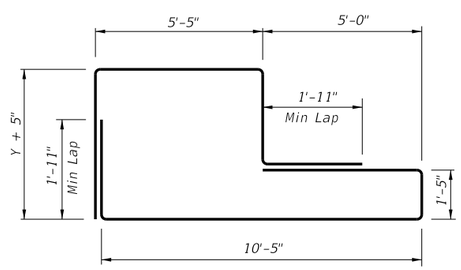

BARS G

Showing one complete bar.

(3) Matches inside face of wall of precast base or precast riser or precast slab lid style "S1" below inlet.

(4) Cut reinforcing bars as needed to provide 1 ½" clear to manhole.

(5) Extend reinforcing bars from precast base or precast riser or precast slab lid style "S1" 7".

(6) Extend reinforcing bars from precast base or precast riser or precast slab lid style "S1" 1'-7 ½".

(7) Do not extend reinforcing bars from precast base.

HL93 LOADING

Texas Department of Transportation

Bridge Division Standard

CAST-IN-PLACE CURB INLET OUTSIDE ROADWAY

CCO

FILE: ccostds1-20.dgn	DN: TxDOT	CK: TxDOT	DW: TxDOT	CK: TxDOT
©TxDOT February 2020	CONT	SECT	JOB	HIGHWAY
REVISIONS	DIST		COUNTY	SHEET NO.

DATE:
FILE:

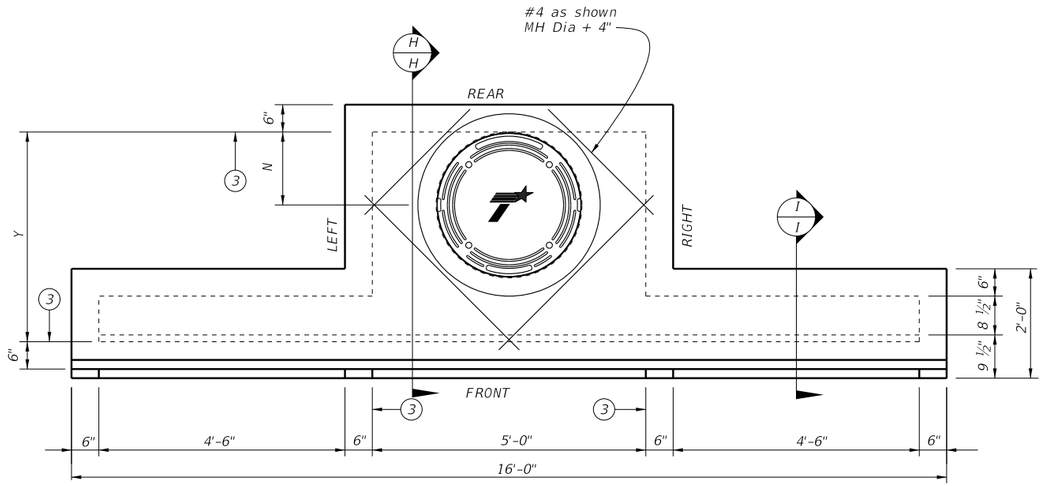

LID PLAN VIEW

(Showing extension on each side.)

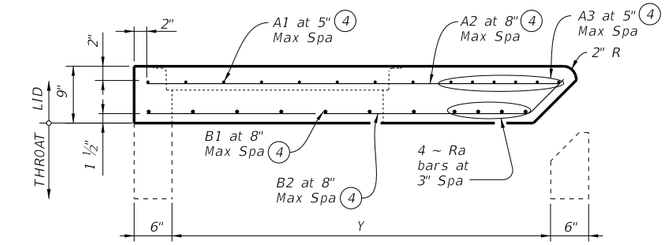

LID SECTION H-H

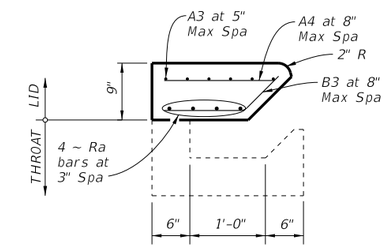

LID SECTION I-I

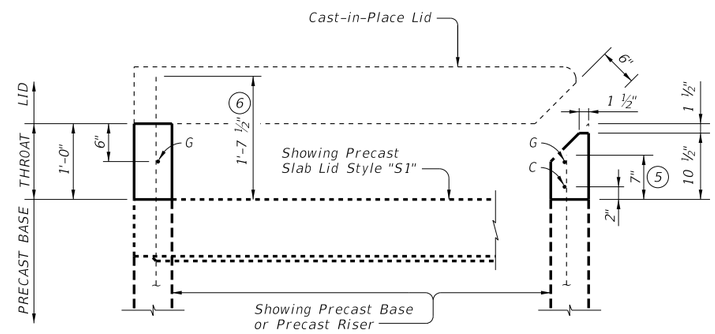

THROAT SECTION J-J

(Showing reinforcing bar extended from pecast base or precast riser or precast slab lid style "S1".)

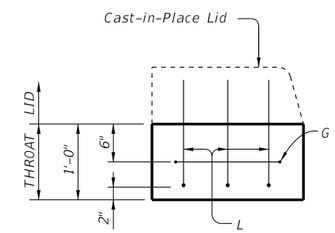

THROAT SECTION K-K

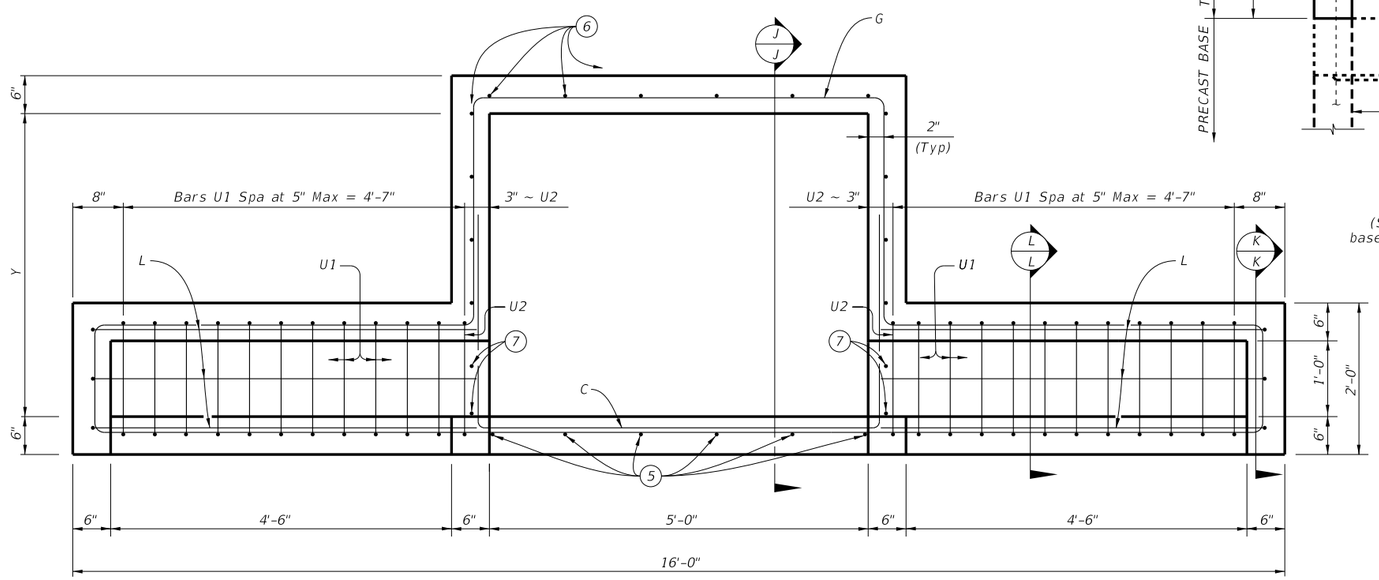

THROAT PLAN VIEW

(Showing extension on each side.)

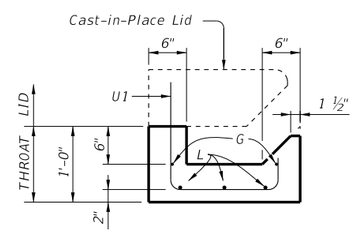

BARS U1 LOCATION

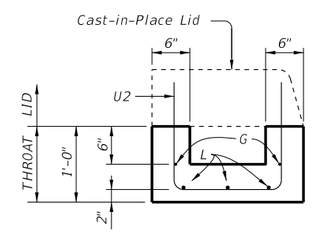

BARS U2 LOCATION

THROAT SECTION L-L

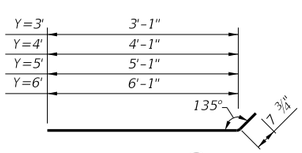

BARS B2 4

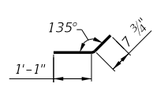

BARS B3

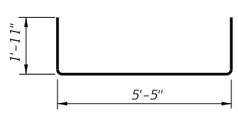

BARS C

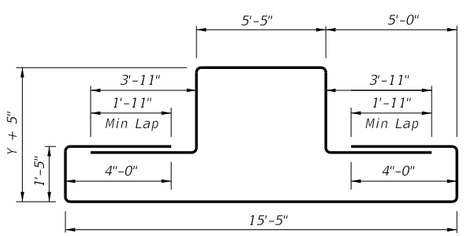

BARS G

Showing one complete bar.

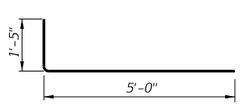

BARS L

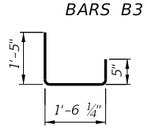

BARS U1

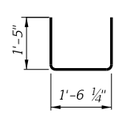

BARS U2

(3) Matches inside face of wall of precast base or precast riser or precast slab lid style "S1" below inlet.

(4) Cut reinforcing bars as needed to provide 1 ½" clear to manhole.

(5) Extend reinforcing bars from precast base or precast riser or precast slab lid style "S1" 7".

(6) Extend reinforcing bars from precast base or precast riser or precast slab lid style "S1" 1'-7 ½".

(7) Do not extend reinforcing bars from precast base.

HL93 LOADING

SHEET 4 OF 4

Texas Department of Transportation

Bridge Division Standard

CAST-IN-PLACE CURB INLET OUTSIDE ROADWAY

CCO

FILE: ccostds1-20.dgn	DN: TxDOT	CK: TxDOT	DW: TxDOT	CK: TxDOT
©TxDOT February 2020	CONT	SECT	JOB	HIGHWAY
REVISIONS	DIST		COUNTY	SHEET NO.

DISCLAIMER:
The use of this standard is governed by the "Texas Engineering Practice Act". No warranty of any kind is made by TxDOT for any purpose whatsoever. TxDOT assumes no responsibility for the conversion of this standard to other formats or for incorrect results or damages resulting from its use.

DATE:
FILE:

DISCLAIMER:
The use of this standard is governed by the "Texas Engineering Practice Act". No warranty of any kind is made by TxDOT for any purpose whatsoever. TxDOT assumes no responsibility for the conversion of this standard to other formats or for incorrect results or damages resulting from its use.

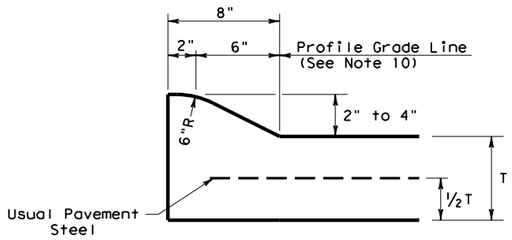

TYPE I CURB (MONOLITHIC)
2" - 4" HEIGHT

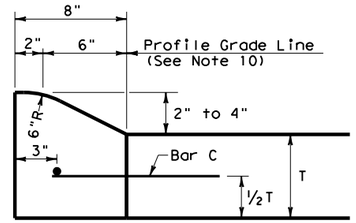

TYPE I CURB
2" - 4" HEIGHT

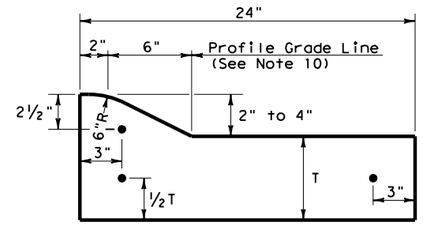

TYPE I CURB AND GUTTER
2" - 4" HEIGHT

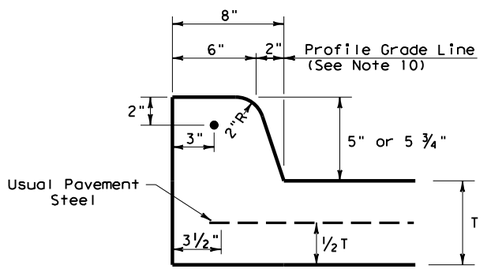

TYPE II CURB (MONOLITHIC)
5" - 5 ¾" HEIGHT

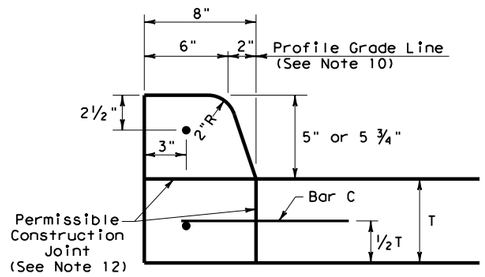

TYPE II CURB
5" - 5 ¾" HEIGHT

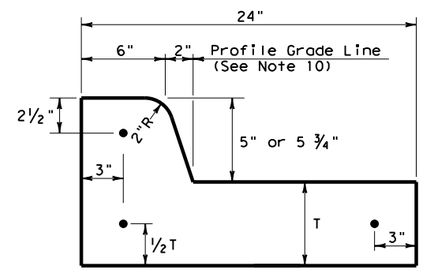

TYPE II CURB AND GUTTER
5" - 5 ¾" HEIGHT

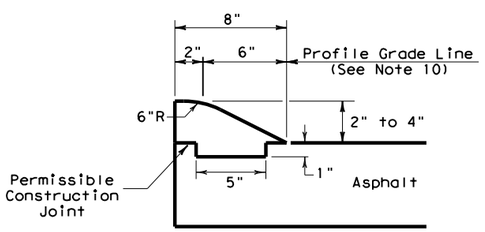

TYPE III CURB (KEYED)
2" - 4" HEIGHT

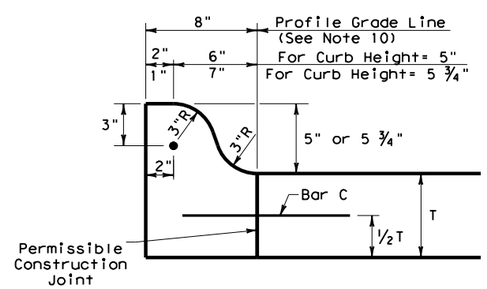

TYPE IIa CURB
5" - 5 ¾" HEIGHT

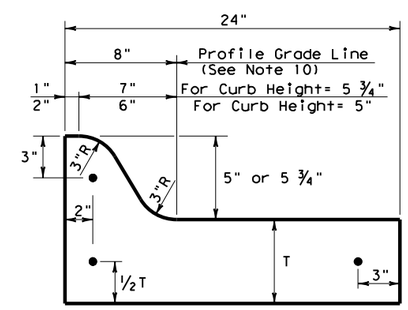

TYPE IIa CURB AND GUTTER
5" - 5 ¾" HEIGHT

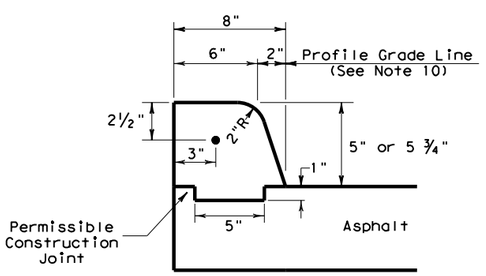

TYPE IV CURB (KEYED)
5" - 5 ¾" HEIGHT

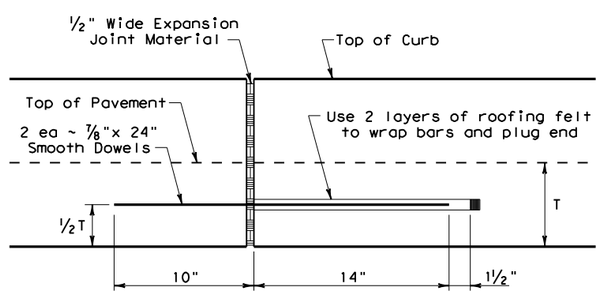

EXPANSION JOINT DETAIL

CURB TRANSITION NOTE:
Field conditions may require a longer or shorter transition, and shall be shown elsewhere in the plans, or as directed by the Engineer.

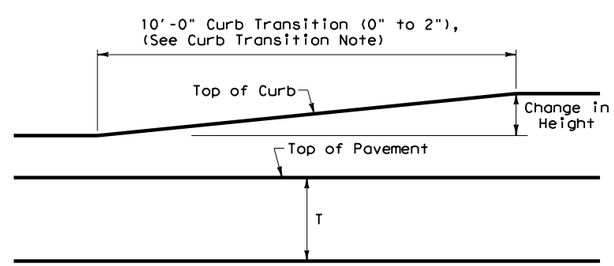

CURB TRANSITION
Note: To be paid for as Highest Curb

GENERAL NOTES

1. All materials and construction shall be in accordance with Item 529, "Concrete Curb, Gutter, and Combined Curb and Gutter."
2. Concrete shall be Class A.
3. When reinforcing bars are used, they shall be No.4 unless otherwise shown. The use of fiber reinforced concrete in lieu of reinforcing steel is acceptable. Use fibers meeting the requirements of DMS 4550, "Fibers for Concrete," and dose fibers in accordance with Material Producers List (MPL) "Fibers for Class A and B Concrete Applications."
4. Round exposed sharp edges with a rounding tool, to a minimum radius of ¼ inch.
5. All existing curbs and driveways to be removed shall be sawed or removed at existing joints.
6. Where concrete curb is to be placed on existing concrete pavement, Bar B may be drilled and the grouted in place, or may be inserted into fresh concrete.
7. Expansion and contraction joints shall be constructed to match pavement joints in all curbs and curb and gutter adjacent to jointed concrete pavement. Where placement of curb or curb and gutter is not adjacent to concrete pavement, expansion joints shall be provided at structures, curb returns at streets, and at locations directed by The Engineer.
8. Vertical and horizontal dowel bars and transverse reinforcing bars shall be placed at four feet C~C.
9. Dimension 'T' shown is the thickness of concrete pavement. When curb is installed adjacent to flexible pavement dimension 'T' is 8" maximum.
10. Usual profile grade line. Refer to typical sections and plan-profile sheets for exact locations.
11. One-half inch expansion joint material shall be provided where curb or curb and gutter is adjacent to sidewalk or riprap.
12. When horizontal permissible construction joints are used, the longitudinal pavement steel shall be placed in accordance with pavement details shown elsewhere in the plans. Reinforcing steel for curb section shall then conform to that required for concrete curb.
13. Bar B used as needed to support curb reinforcing steel during concrete placement.

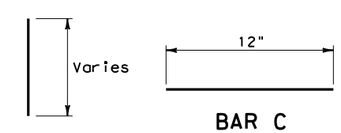

BAR B

BAR C

Texas Department of Transportation

Design Division Standard

CONCRETE CURB AND CURB AND GUTTER

CCCG-21

FILE: cccg21.dgn	DN: TXDOT	CK: AN	DW: SS	CK: KM
© TxDOT: FEBRUARY 2021	CONT	SECT	JOB	HIGHWAY
REVISIONS				
	DIST	COUNTY		SHEET NO.

DATE:
FILE:

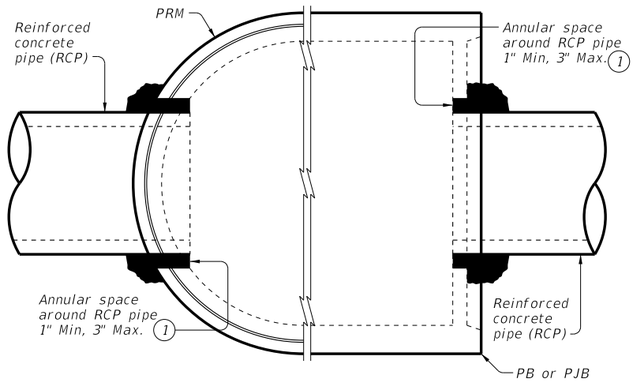

PRECAST ROUND MANHOLE (PRM) WITH THROUGH-HOLE

PRECAST BASE (PB) OR PRECAST JUNCTION BOX (PJB) WITH THIN-WALL KNOCK-OUT

TYPICAL HALF PLAN

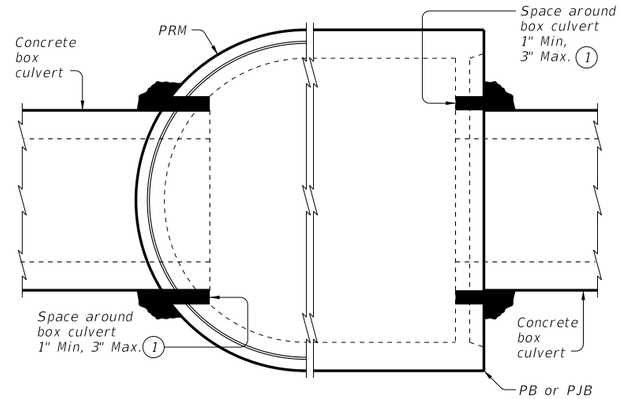

PRECAST ROUND MANHOLE (PRM) WITH THROUGH-HOLE

PRECAST BASE (PB) OR PRECAST JUNCTION BOX (PJB) WITH THIN-WALL KNOCK-OUT

TYPICAL HALF PLAN

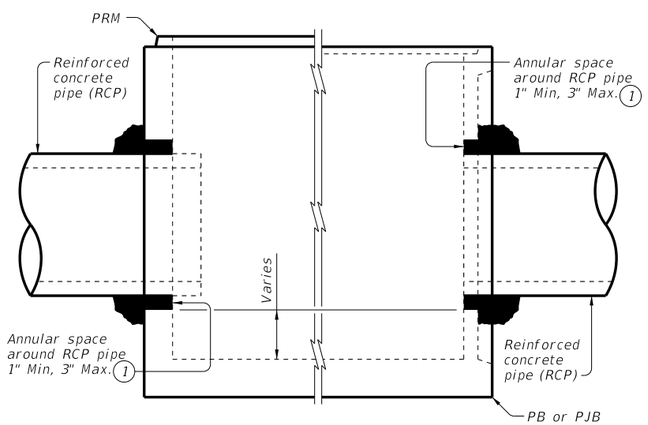

PRECAST ROUND MANHOLE (PRM) WITH THROUGH-HOLE

PRECAST BASE (PB) OR PRECAST JUNCTION BOX (PJB) WITH THIN-WALL KNOCK-OUT

TYPICAL HALF ELEVATION

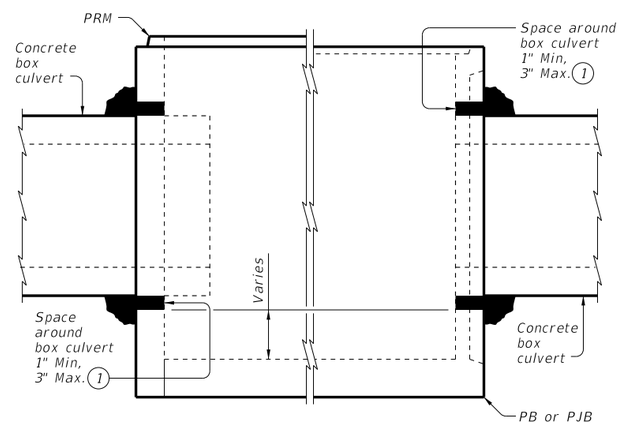

PRECAST ROUND MANHOLE (PRM) WITH THROUGH-HOLE

PRECAST BASE (PB) OR PRECAST JUNCTION BOX (PJB) WITH THIN-WALL KNOCK-OUT

TYPICAL HALF ELEVATION

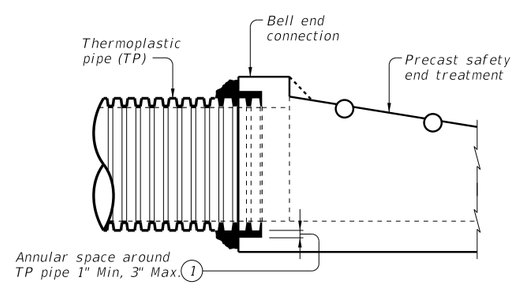

TYPICAL PARTIAL ELEVATION OF PRECAST SAFETY END TREATMENTS

Showing square PSET for parallel drainage, cross drainage shown similar.

(1) Completely fill the void between the precast structure and the connecting pipe or box with cementitious grouts and mortars in accordance with DMS-4675 "Cementitious Grouts and Mortars for Miscellaneous Application".

CONSTRUCTION NOTES:

Do not grout rubber gasket joints without Manufacturer's recommendations.

Do not use bricks, masonry blocks, native stone, or similar materials in conjunction with grouted connections when filling void spaces around pipes or box culverts.

MATERIAL NOTES:

Provide grouted connections in accordance with DMS-4675 "Cementitious Grouts and Mortars for Miscellaneous Application".

GENERAL NOTES:

See applicable standards for notes and details not shown:

- Precast Base (PB)
- Precast Junction Box (PJB)
- Precast Round Manhole (PRM)
- Precast Safety End Treatments C/D Square (PSET-SC)
- Precast Safety End Treatments P/D Square (PSET-SP)

Provide Concrete Box Culverts in accordance with Item 462 "Concrete Box Culverts and Drains".

Provide Reinforced Concrete Pipe (RCP) in accordance with Item 464 "Reinforced Concrete Pipe".

Provide Thermoplastic Pipe (TP) in accordance with Special Specification Thermoplastic Pipe.

Payment for grouted connections is considered subsidiary to other bid Items.

DISCLAIMER:
The use of this standard is governed by the "Texas Engineering Practice Act". No warranty of any kind is made by TxDOT for any purpose whatsoever. TxDOT assumes no responsibility for the conversion of this standard to other formats or for incorrect results or damages resulting from its use.

DATE:
FILE:

Texas Department of Transportation

Bridge Division Standard

PIPE AND BOX GROUTED CONNECTIONS FOR PRECAST STRUCTURES

PBGC

FILE: pbgcstd1-20.dgn	DN: TxDOT	CK: TAR	DW: JTR	CK: TAR
©TxDOT February 2020	CONT	SECT	JOB	HIGHWAY
REVISIONS	DIST	COUNTY		SHEET NO.

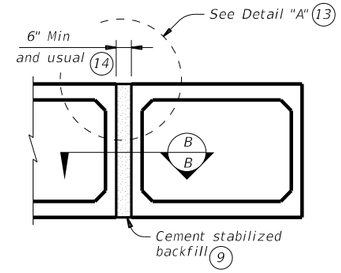

MULTIPLE UNIT PLACEMENT

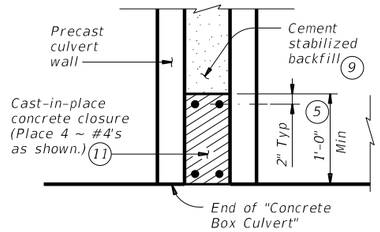

SECTION B-B

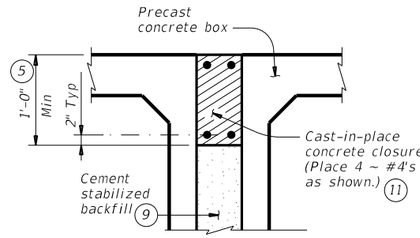

DETAIL "A" (13)

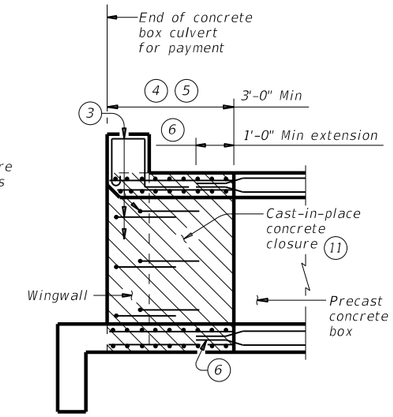

WINGWALL CONNECTION

(Also applies to safety end treatment.)

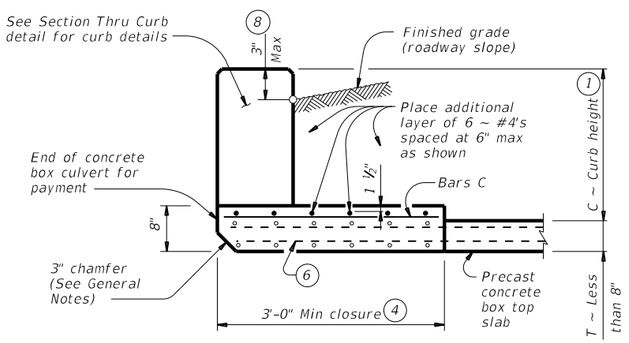

SECTION THRU TOP SLABS LESS THAN 8"

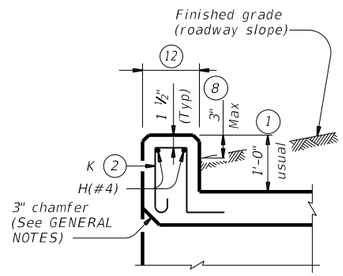

SECTION THRU CURB

QUANTITIES PER FOOT OF CURB (10)	
Reinforcing Steel	4.12 Lb
Concrete	0.037 CY

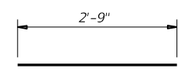

BARS C (#4)
(Spa = 1'-0" Max)

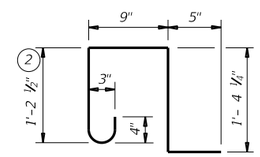

BARS K (#4)
(Spa = 1'-0" Max)
(Length = 4'-2")

(1) 0" Min to 5'-0" Max. Estimated curb heights are shown elsewhere in the plans. For structures with pedestrian rail, bicycle rail, or curbs taller than 1'-0, refer to the Extended Curb Details (ECD) standard sheet. For structures with T631 or T631LS bridge rail, refer to the Mounting Details for T631 & T631LS Rails (T631-CM) standard sheet. Refer to the Box Culvert Rail Mounting Details (RAC) standard sheet for structures with bridge rail other than T631 or T631LS.

(2) For curbs less than 1'-0" high, tilt Bars K or reduce bar height as necessary to maintain cover. For curbs less than 3" high, Bars K may be omitted.

(3) Extend curb, wingwall, or safety end treatment reinforcing into concrete closure. Bend or trim, as necessary, any reinforcing that does not fit into closure area.

(4) Provide a 3'-0" Min cast-in-place concrete closure. Break back boxes in the field or cast boxes short. Provide bands of reinforcing in the closure that are the same size and spacing as in the precast box section. Provide #4 longitudinal reinforcement spaced at 12 inches Max within the closure. Except where shown otherwise, construct the cast-in-place closure flush with the inside and outside faces of the precast box section.

(5) For multiple unit placements, adjust the length of the closure for the interior walls as necessary. Provide a 3'-0" Min cast-in-place closure in the top slab, bottom slab, and exterior wall. See Section B-B detail when interior walls are cast full length.

(6) Extend precast box reinforcing a minimum of 1'-0" into concrete closure (Typ).

(7) Place bands of reinforcing matching the inside and outside face reinforcing in the gaps of the top and bottom slabs. Place a band matching the outside face reinforcing of the wall in the gaps of the walls (placed in the outside face only). Tack weld the bands to the exposed reinforcing at each point of contact.

(8) For vehicle safety, the following requirements must be met:
- For structures without bridge rail, construct curbs no more than 3" above finished grade.
- For structures with bridge rail, construct curbs flush with finished grade.

Reduce curb heights, if necessary, to meet the above requirements. No changes will be made in quantities and no additional compensation will be allowed for this work.

(9) Cement stabilized backfill between boxes is considered part of the box culvert for payment.

(10) All curb concrete and reinforcing is considered part of the box culvert for payment.

(11) Any additional concrete and reinforcing required for the closures will be considered subsidiary to the box culvert for payment.

(12) 1'-0" typical. 2'-3" when the Box Culvert Rail Mounting Details (RAC) standard sheet is referred to elsewhere in the plans.

(13) For multiple unit placement with overlay, with 1 to 2 course surface treatment, or with the top slab as the final riding surface, provide wall closure as shown in Detail "A".

(14) This dimension may be increased with approval of the Engineer to allow the precast boxes to be tunneled or jacked in accordance with Item 476, "Jacking, Boring, or Tunneling Pipe or Box". No payment will be made for any additional material in the gap between adjacent boxes.

MATERIAL NOTES:

Provide Grade 60 reinforcing steel.
Provide ASTM A1064 welded wire reinforcement.
Provide Class C concrete (f'c = 3,600 psi) for the closures.
Provide cement stabilized backfill meeting the requirements of Item 400, "Excavation and Backfill for Structures."
Any additional concrete required for the closures will be considered subsidiary to the box culvert.

GENERAL NOTES:

Designed according to AASHTO LRFD Bridge Design Specifications.
Refer to the Single Box Culverts Precast (SCP) standard sheets for details and notes not shown.
Chamfer the bottom edge of the top slab closure 3 inches at culvert closure ends.

Cover dimensions are clear dimensions, unless noted otherwise.
Reinforcing bars dimensions are out-to-out of bars.

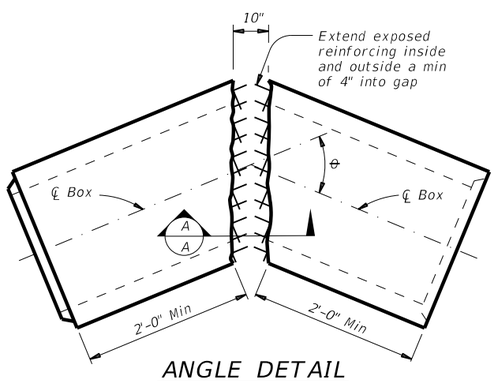

ANGLE DETAIL

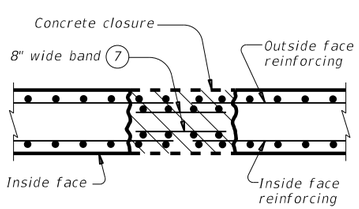

SECTION A-A

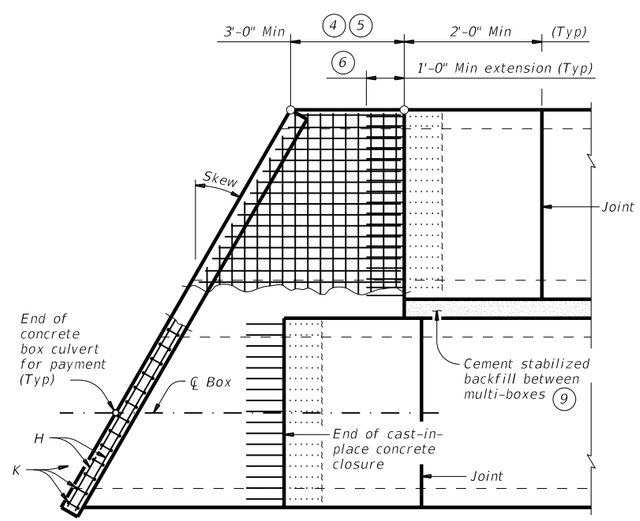

PLAN OF SKEWED ENDS

(Showing multi-box placement.)

HL93 LOADING

Texas Department of Transportation — Bridge Division Standard

BOX CULVERTS PRECAST MISCELLANEOUS DETAILS

SCP-MD

FILE: scpmdsts-20.dgn	DN: GAF	CK: LMW	DW: BWH/TxDOT	CK: GAF
©TxDOT February 2020	CONT	SECT	JOB	HIGHWAY
REVISIONS	DIST		COUNTY	SHEET NO.

DISCLAIMER:
The use of this standard is governed by the "Texas Engineering Practice Act". No warranty of any kind is made by TxDOT for any purpose whatsoever. TxDOT assumes no responsibility for the conversion of this standard to other formats or for incorrect results or damages resulting from its use.

DATE:
FILE:

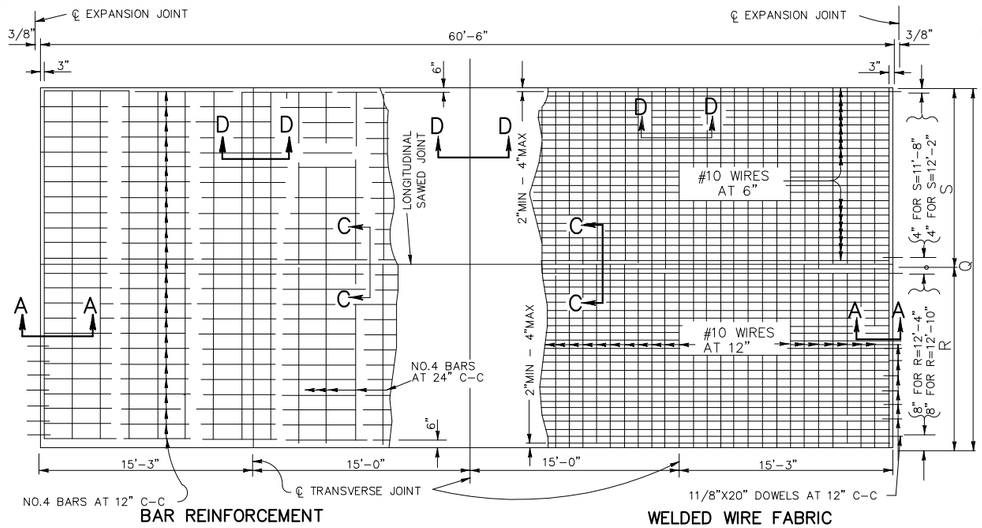

BAR REINFORCEMENT

WELDED WIRE FABRIC

TWO LANE PAVEMENT PLAN

	WIDTH – Q		
	24'-0"	24'-6"	25'-0"
R	12'-4"	12'-4"	12'-10"
S	11'-8"	12'-2"	12'-2"

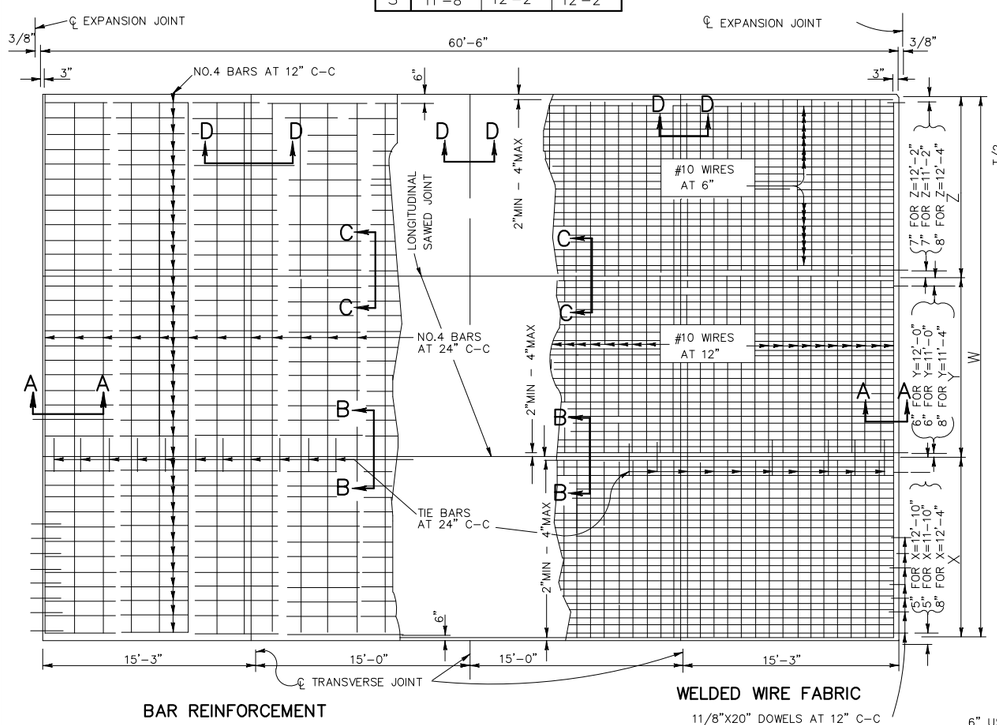

BAR REINFORCEMENT

WELDED WIRE FABRIC

THREE LANE PAVEMENT PLAN

	WIDTH – W		
	37'-0"	36'-0"	34-0"
X	12'-10"	12'-4"	11'-10"
Y	12'-0"	11'-4"	11'-0"
Z	12'-2"	12'-4"	11'-2"

D = DIAMETER
R = RADIUS
T = THICKNESS

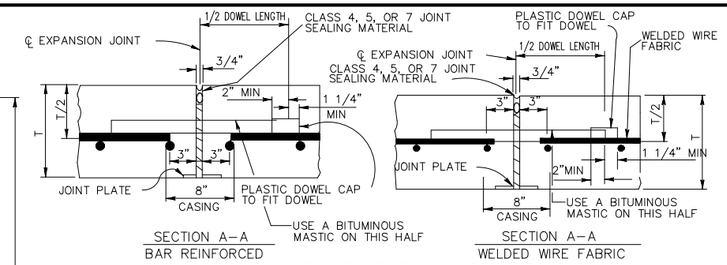

SECTION A–A
BAR REINFORCED

SECTION A–A
WELDED WIRE FABRIC

TRANSVERSE EXPANSION JOINTS

NOTE: DOWEL BARS CONFORMING TO ASTM A615 OR A616 GRADE 60 ARE ACCEPTABLE

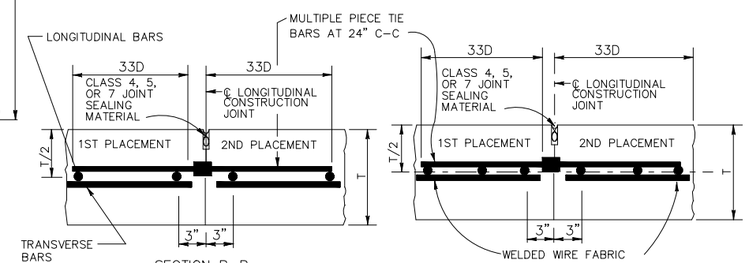

SECTION B–B
BAR REINFORCEMENT

SECTION B–B
BAR REINFORCEMENT

LONGITUDINAL CONSTRUCTION JOINTS

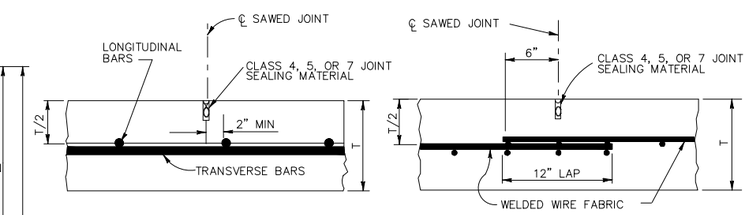

SECTION C–C
BAR REINFORCEMENT

SECTION C–C
WELDED WIRE FABRIC

LONGITUDINAL SAWED JOINTS

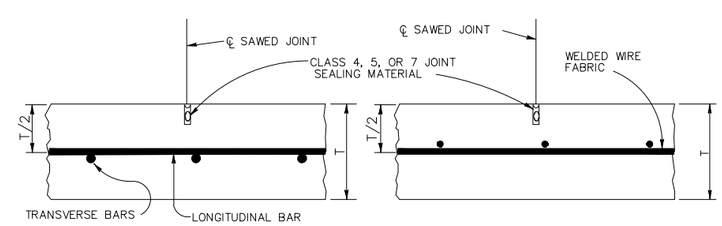

SECTION D–D
BAR REINFORCEMENT

SECTION D–D
BAR REINFORCEMENT

TRANSVERSE SAWED JOINTS

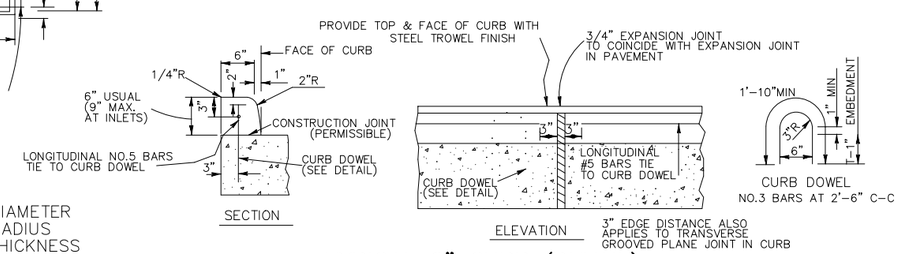

SECTION

ELEVATION

TYPICAL 6" CURB (DETAIL)

GENERAL NOTES

1. MULTIPLE PIECE TIE BARS ARE REQUIRED AT LONGITUDINAL CONSTRUCTION JOINTS. USE MULTIPLE PIECE TIE BAR ASSEMBLIES WITH STOP TYPE COUPLINGS AND WITH THREADS ON THE BARS. ENSURE THE MULTIPLE PIECE TIE BAR ASSEMBLIES DEVELOP A MINIMUM ULTIMATE TENSILE STRENGTH EQUAL TO 1.25 TIMES THE YIELD STRENGTH OF THE TRANSVERSE BARS BEING JOINED. USE DEFORMED REINFORCING BARS FOR TIE BARS. TIE BAR ASSEMBLIES MADE FROM STEELS OTHER THAN ASTM GRADE 60 AND WITH DEFORMATIONS OTHER THAN ASTM STANDARD MAY BE USED IF IT CAN BE PROVEN TO THE ENGINEER THAT THEY ARE IN EVERY RESPECT THE EQUAL OF THE ASSEMBLIES SPECIFIED. LABORATORY TESTING OF THE PROPOSED ASSEMBLIES, AT THE CONTRACTOR'S EXPENSE, MAY BE REQUIRED.
2. FORM CONSTRUCTION JOINTS WITH METAL OR WOOD FORMS EQUAL IN DEPTH TO THE NOMINAL DEPTH OF THE PAVEMENT OR BY OTHER MEANS APPROVED PRIOR TO THEIR USE.
3. SAW LONGITUDINAL AND TRANSVERSE JOINTS AS SOON AS SAWING CAN BE ACCOMPLISHED WITHOUT DAMAGE TO THE PAVEMENT AND BEFORE 24 HOURS AFTER PLACING THE CONCRETE, THE EXACT TIME WILL BE APPROVED BY THE ENGINEER. PREFORMED JOINT WITH ASPHALT STRIP IS NOT ACCEPTABLE.
4. LONGITUDINAL JOINTS ARE SHOWN OFFSET FOUR INCHES FROM THE THEORETICAL LANE LINE AND MAY BE OFFSET TO EITHER SIDE IF THE WIDTH OF THE WIRE FABRIC IS PROPERLY ADJUSTED.
5. ONE OF THE LONGITUDINAL JOINTS OF PAVEMENT SLABS WIDER THAN TWO LANES MAY BE A CONSTRUCTION JOINT. FOR PAVEMENT SLABS WIDER THAN 15 FT. PROVIDE A LOGITUDINAL SAWED JOINT UNLESS OTHERWISE DIRECTED.
6. FORM THE JOINT SEAL SPACE AT TRANSVERSE EXPANSION JOINTS BY USING A STRAIGHT FORM PLACED BEHIND THE LONGITUDINAL FLOAT. LOOSEN THE FORM AS SOON AS THE CONCRETE WILL RETAIN ITS SHAPE AND EDGE WITH AN APPROVED EDGING TOOL. TOOL BOTH EDGES OF LONGITUDINAL CONSTRUCTION JOINTS TO A 1/8IN. RADIUS AT THE PAVEMENT SURFACE.
7. DO NOT DISCHARGE CONCRETE FROM THE MIXER DIRECTLY ON TOP OF OR ON THE SIDES OF THE EXPANSION JOINT ASSEMBLIES.
8. LAP TRANSVERSE EDGES OF SHEETS OF WELDED WIRE FABRIC 12 INCHES EXCEPT AT TRANSVERSE EXPANSION JOINTS. LAP LONGITUDINAL EDGES 6 INCHES EXCEPT AT LONGITUDINAL CONSTRUCTION JOINTS.
9. DOWEL BARS MAY BE COATED WITH STAINLESS STEEL, MONEL METAL, OR IN ACCORDANCE WITH THE ITEM "REINFORCING STEEL" SECTION ON EPOXY COATING; WITH A WELDED DOWEL ASSEMBLY SUPPORT, AS APPROVED. ENSURE THE CASING CONFORMS TO THE REQUIREMENTS OF ONE OF THE GRADES OF ASTM A167–70 OR A176–71 AND IS NOT LESS THAN 0.010 INCH THICK. PROVIDE A CASING AT LEAST 8 INCHES LONG AND THAT COVERS THE MIDDLE 8 INCHES OF THE DOWEL.
10. SECURE DOWELS PARALLEL TO THE PAVEMENT SURFACE AND PERPENDICULAR TO THE JOINT WITH THE AID OF APPROVED WELDED WIRE BASKET ARRANGEMENTS. ENSURE WELDED WIRE BASKET ARRANGEMENTS DO NOT CROSS THE EXPANSION JOINT. UNIFORMLY COAT DOWELS WITH A BITUMINOUS MASTIC ON THE END WITH THE DOWEL CAP.
11. DO NOT BEND TIE BARS AND DOWEL BARS. TO PREVENT DISPLACEMENT OF WIRE FABRIC BY CONCRETE PLACEMENT, TIE THE FABRIC PANEL TOGETHER AND TIE THE INITIAL FABRIC PANELS OF EACH SLAB TO THE DOWEL BASKET OR AS DIRECTED.
12. TOOL PAVEMENT EDGES TO A RADIUS OF 1/8 IN. WITH AN APPROVED EDGING TOOL.
13. DETAILS FOR PAVEMENT WIDTH, PAVEMENT THICKNESS, AND CROWN–SLOPE ARE ELSEWHERE SHOWN ON THE PLANS.
14. THE CONTRACTOR HAS THE OPTION OF USING WELDED WIRE FABRIC OR BAR REINFORCEMENT. LOCATE THE LONGITUDINAL STEEL AT THE CENTER OF THE SLAB. TAKE NECESSARY PRECAUTIONS TO INSURE THAT THE FINAL POSITION OF STEEL IS WITHIN 1/2 IN. OF THE SLAB CENTER. ENSURE THE LONGITUDINAL AND TRANSVERSE STEEL SPACING DOES NOT VARY MORE THAN ONE–TWELFTH OF SPACING SHOWN.
15. LONGITUDINAL STEEL MAY BE SPLICED WITH 33 TIMES BAR DIAMETER LAPS.
16. FOR LANE WIDTHS NOT SHOWN OR FOR VARIABLE PANEL LENGTHS AND WIDTHS, SPACE REINFORCING STEEL AND DOWELS AS DIRECTED.
17. USE APPROVED BAR MAT CHAIRS. DO NOT EXCEED CHAIR SPACING OF 30 IN. C–C (TRANSVERSE) AND 48 IN. C–C (LONGITUDINAL). GALVANIZING THE CHAIRS IS NOT REQUIRED.
18. OBTAIN BOARDS FOR EXPANSION JOINT FILLER FROM REDWOOD TIMBER.
19. PROVIDE AND CONSTRUCT THE JOINT PLATE AS APPROVED.
20. WHEN CURB IS PLACED SEPARATELY FROM THE CONCRETE PAVEMENT, PROVIDE THE REINFORCING STEEL AS SHOWN IN THE CURB DETAIL. THE CURB REINFORCING STEEL MAY BE OMITTED WHEN THE CURB IS PLACED MONOLITHICALLY.

(GENERAL NOTES CONTINUED ON SHEET 2 OF 2)

Texas Department of Transportation
Houston District

JOINTED REINFORCED CONCRETE PAVEMENT DETAILS

(FOR PAVEMENT THICKNESS 10 INCHES OR LESS)

JRCP

FILE: STDB–2.dgn	DN:	CK:	DW:	CK:
©TxDOT MAR.2004	DIST	FED REG	PROJECT NO.	SHEET
REVISIONS 5/05 2004 SPECS 7/2010 ADDED NOTE 8/2015 MODIFIED NOTES	HOU	6		
	COUNTY	CONTROL	SECT / JOB	HIGHWAY

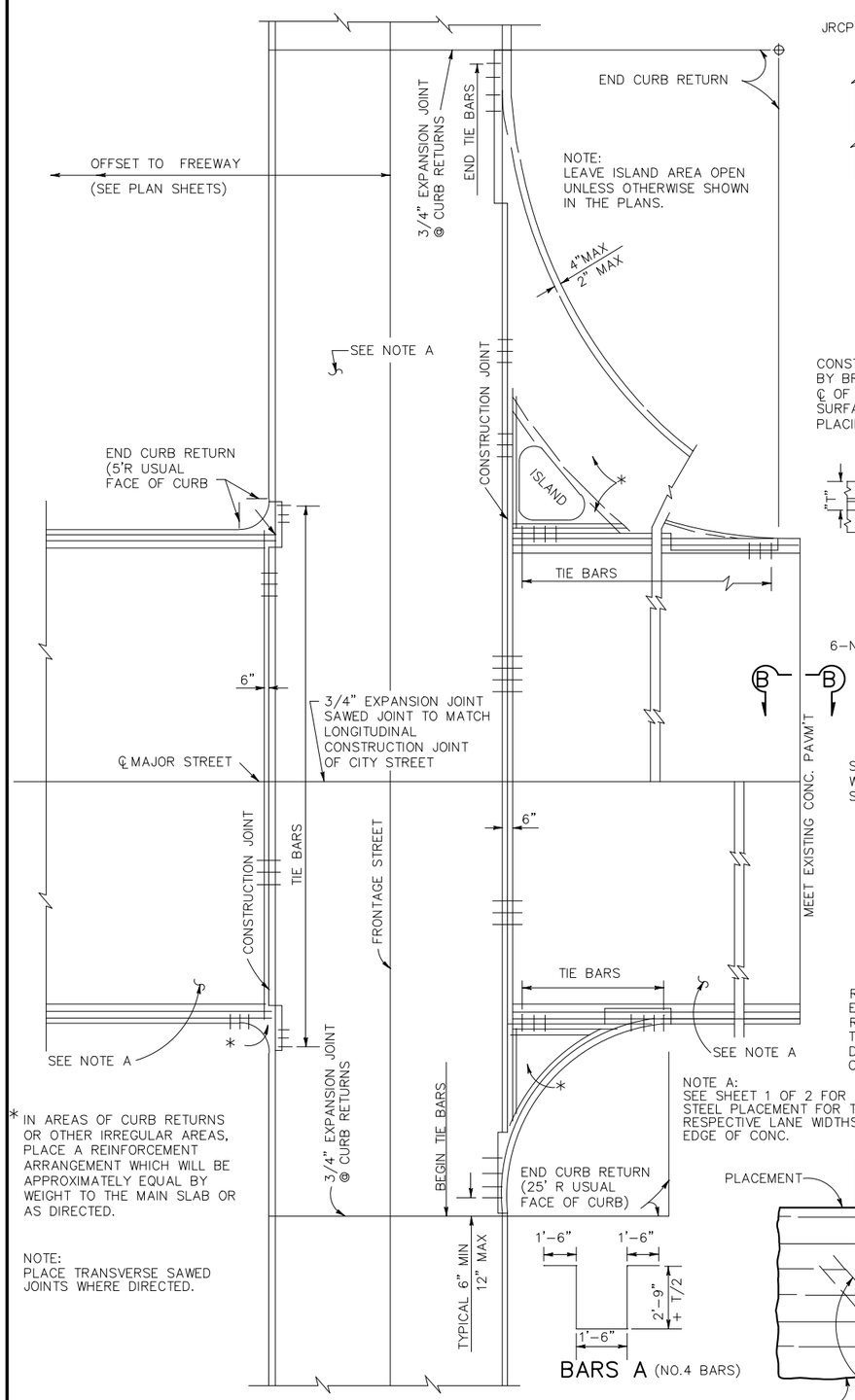

INTERSECTION OF MAJOR STREET WITH FRONTAGE STREET
TYPICAL REINFORCING PLAN

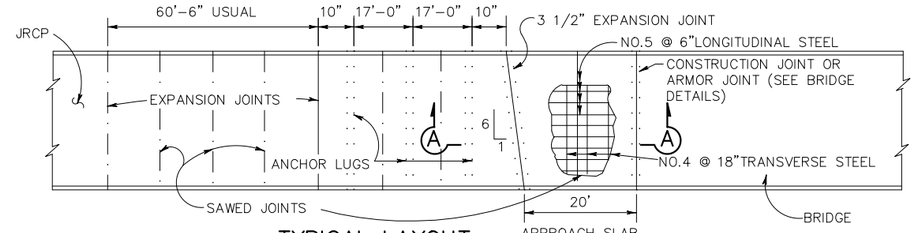

TYPICAL LAYOUT
(TERMINAL ANCHORAGE AT BRIDGES)

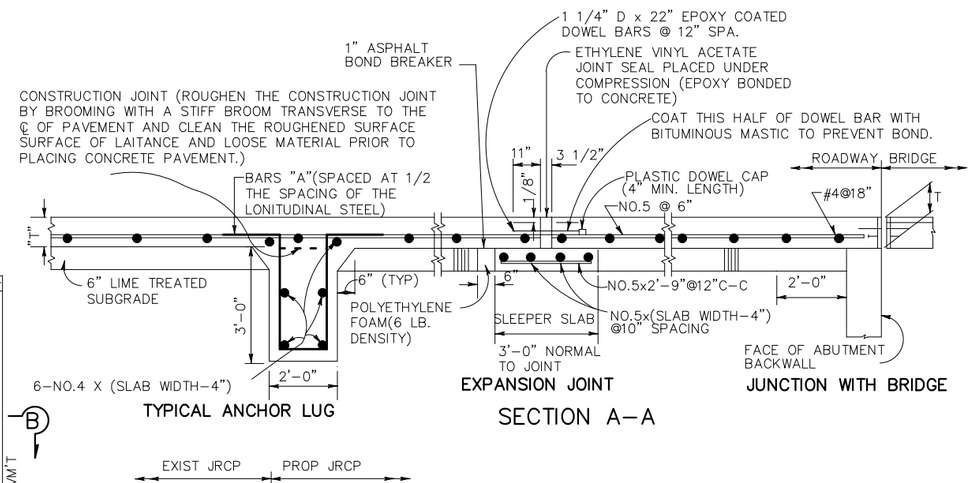

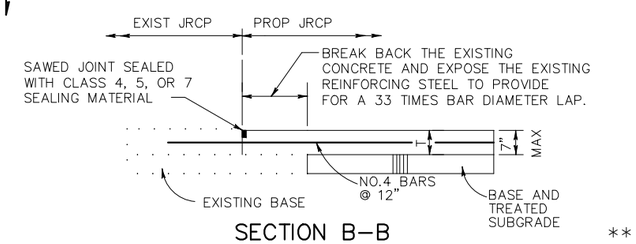

SECTION B-B
(FOR PROPOSED PAVEMENT DEPTHS OF 7" MAX)

**

REPLACE ANY BENT LONGITUDNIAL REINFORCING. IF THERE IS NOT SUFFICIENT EXPOSED REINFORCING TO PROVIDE A MINIMUM OF A 33 TIMES BAR DIAMETER LAP, REMOVE THE EXISTING PAVEMENT AND SUFFICIENTLY EXPOSE THE EXISTING REINFORCING TO PROVIDE A 33 TIMES BAR DIAMETER LAP. REPLACE ANY SHEAR BARS THAT ARE DISTURBED, BY DRILLING AND GROUTING AS REQUIRED BY NOTE #29. PERFORM THIS CORRECTIVE ACTION AT NO EXPENSE TO THE DEPARTMENT.

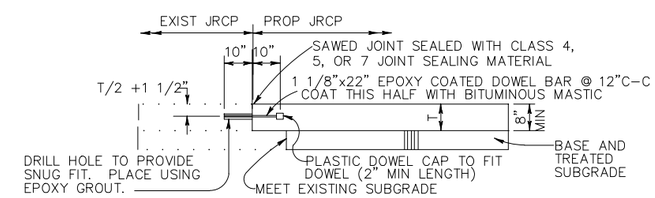

SECTION B-B
(FOR PROPOSED PAVEMENT DEPTHS OF 8" MIN)

GENERAL NOTES (CONTINUED FROM SHEET 1 OF 2)

21. CONSTRUCT ANCHOR LUGS, EXPANSION JOINTS, AND SLEEPER SLABS AS DETAILED IN SECTION A-A. THESE WILL BE PAID FOR IN ACCORDANCE WITH ITEM, "CONCRETE PAVEMENT TERMINALS."

22. REINFORCING STEEL FOR TERMINAL ANCHOR SYSTEMS MAY BE GRADE 40 OR GRADE 60.

23. PLACE CONCRETE FOR ANCHOR LUGS AS SOON AS POSSIBLE AFTER COMPLETING EXCAVATION,TO PRESERVE THE INHERENT SOIL CHARACTERISTICS. EXCAVATING FOR AND PLACING CONCRETE FOR ANCHOR SYSTEM MAY BE IN PREFORMED SECTIONS CORRESPONDING TO THE WIDTH OF PAVING PLACEMENT.

24. APPLY A STEEL TROWEL FINISH TO SLEEPER SLABS AND AND COAT WITH AN ASPHALT BOND BREAKER.

25. THE DETAILS FOR ANCHORS, LUGS, EXPANSION JOINTS, AND SLEEPER SLABS ARE NOT APPLICABLE UNLESS SHOWN ELSEWHERE IN THE PLANS.

26. APPROACH SLAB WILL BE PAID FOR IN ACCORDANCE WITH THE ITEM "CONCRETE STRUCTURES."

27. WITHIN 5 MINUTES OF SAWING, COMPLETELY REMOVE THE RESULTING SLURRY FROM THE JOINT BY FLUSHING WITH HIGH PRESSURE WATER. THEN ALLOW THE JOINT TO DRY FOR A MINIMUM OF 48 HOURS BEFORE SANDBLASTING THE JOINT.

28. DO NOT SHEAR CUT DOWEL BARS.

29. SIZE ADDITIONAL SHEAR BARS AS LONGITUDIAL BARS AND SPACE THEM MIDWAY BETWEEN ALTERNATE LONGITUDINAL BARS ALONG THE TRANSVERSE CONSTRUCTION JOINT FORMED AT THE LEAVE-OUT.

30. IF THE CONCRETE DESIGN REQUIRES GREATER THAN 5.5 SACKS OF CEMENTITIOUS MATERIAL PER CUBIC YARD, WRITTEN APPROVAL BY THE AREA ENGINEER WILL BE REQUIRED. ENSURE CONCRETE PAVEMENT MIXES PLACED FROM APRIL 1 TO OCTOBER 31 CONTAIN A MINIMUM OF 25 PERCENT BY WEIGHT OF CLASS "F" FLY ASH.

31. IN LOCATIONS WHERE THE PLANS CALL FOR FAST TRACK CONCRETE PAVEMENT IN LIEU OF JRCP (LAID ON COMPACTED OR STABILIZED SUBGRADE), USE DETAILS IN THIS STANDARD IN CONJUNCTION WITH THE APPROPRIATE FAST TRACK CONCRETE SPECIFICATION. IF THE JRCP IS LAID UPON A BASE STRUCTURE, ADD 3" TO THE FAST TRACK PAVEMENT THICKNESS TO COMPENSATE FOR THE BASE.

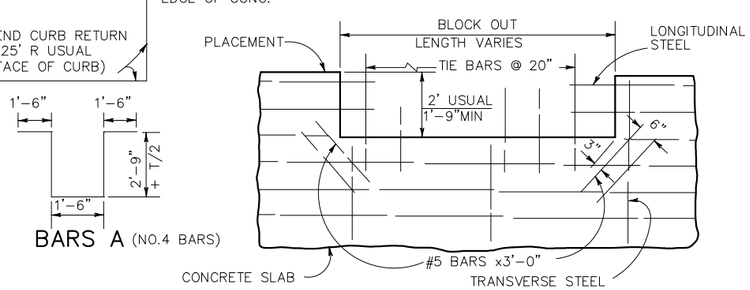

DETAIL OF BLOCKOUT

*OMIT TIE BARS @ INLET BLOCK-OUT

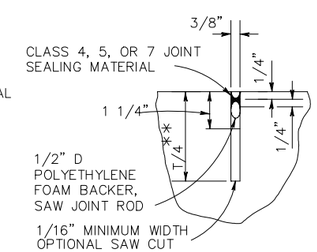

SAWED JOINT

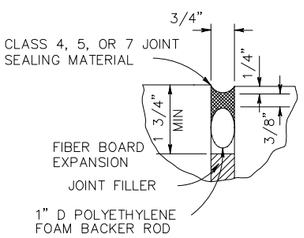

EXPANSION JOINTS

** IF SILICEOUS RIVER GRAVEL IS USED AS THE COARSE AGGREGATE, THIS DEPTH IS T/3.

JOINT SEALING DETAILS

BARS A (NO.4 BARS)

Texas Department of Transportation
Houston District

JOINTED REINFORCED CONCRETE PAVEMENT DETAILS

EXPANSION JOINT DESIGN
(FOR PAVEMENT THICKNESS 10 INCHES OR LESS)

JRCP

SHEET 2 OF 2

FILE: STDB-2.dgn	DN:	CK:	DW:	CK:
©TxDOT MAR.2004	DIST	FED REG	PROJECT NO.	SHEET
REVISIONS 5/05 2004 SPECS 7/2010 ADDED NOTE 9/2013 ADDED NOTE 8/2015 MODIFIED NOTES	HOU	6		
	COUNTY	CONTROL	SECT	JOB	HIGHWAY

DISCLAIMER:
The use of this standard is governed by the "Texas Engineering Practice Act". No warranty of any kind is made by TxDOT for any purpose whatsoever. TxDOT assumes no responsibility for the conversion of this standard to other formats or for incorrect results or damages resulting from its use.

METHOD B: JOINT SEALING COMPOUND

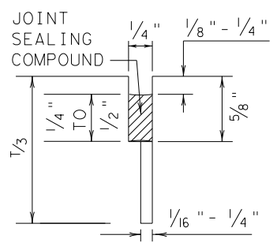

LONGITUDINAL SAWED
CONTRACTION JOINT

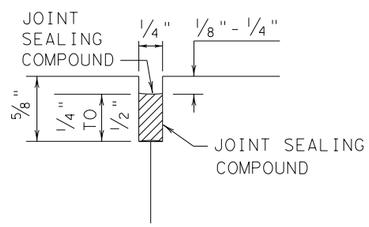

LONGITUDINAL OR TRANSVERSE
CONSTRUCTION JOINT

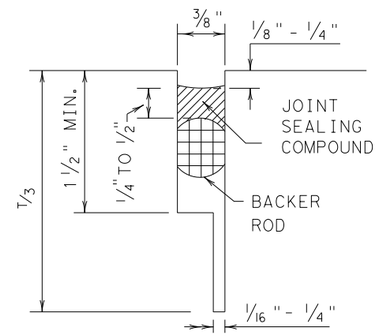

TRANSVERSE SAWED
CONTRACTION JOINT

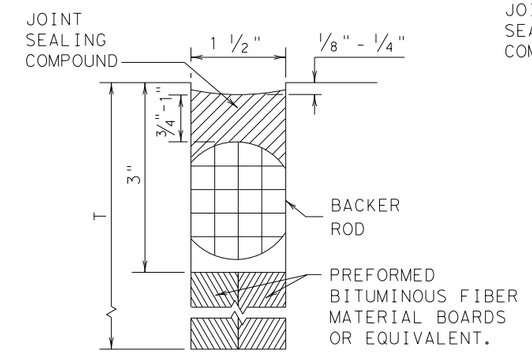

TRANSVERSE FORMED
EXPANSION JOINT

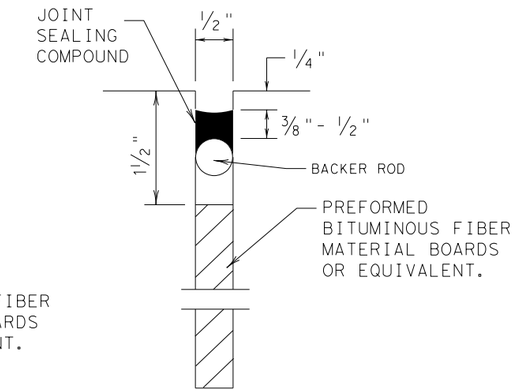

FORMED
ISOLATION JOINT

METHOD A: PREFORMED COMPRESSION SEALS (PCS)(DMS-6310 CLASS 6)

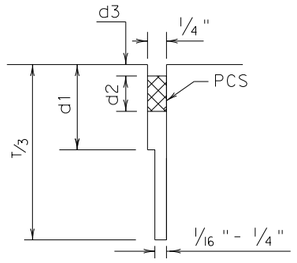

LONGITUDINAL SAWED
CONTRACTION JOINT

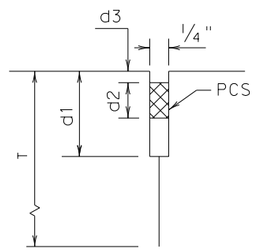

LONGITUDINAL
CONSTRUCTION JOINT

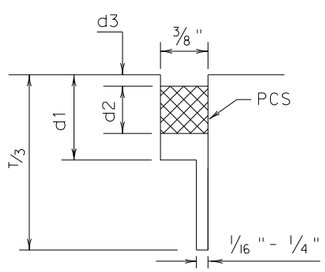

TRANSVERSE SAWED
CONTRACTION JOINT

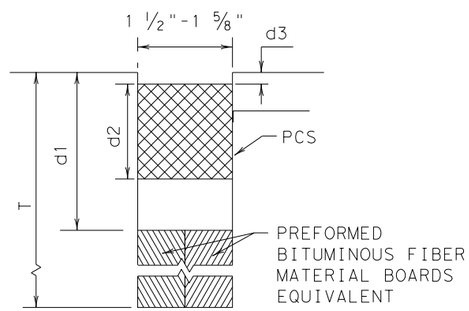

TRANSVERSE FORMED
EXPANSION JOINT

GENERAL NOTES

1. UNLESS OTHERWISE SHOWN IN THE PLANS, EITHER METHOD "A" OR METHOD "B" MAY BE USED.
2. THE LOCATION OF JOINTS SHALL BE AS SHOWN ELSEWHERE IN THE PLANS.
3. THE JOINT RESERVOIR FOR SEALANT OR PCS SHALL BE SAWED UNLESS OTHERWISE SHOWN ON THE PLANS FOR THE LONGITUDINAL AND TRANSVERSE CONSTRUCTION JOINTS AND THE SAWED JOINTS.
4. DIMENSIONS d1, d2, AND d3 SHOWN IN METHOD A SHALL BE IN ACCORDANCE WITH THE PREFORMED COMPRESSION SEAL MANUFACTURER'S RECOMMENDATION.
5. REFER TO DMS-6310 "JOINT SEALANTS AND FILLERS" FOR THE CLASSIFICATIONS.
6. FOR SAWED LONGITUDINAL JOINT, LONGITUDINAL OR TRANSVERSE CONSTRUCTION JOINT, USE JOINT SEALANT CLASS 5 OR 8 UNLESS OTHERWISE SHOWN ON THE PLAN OR APPROVED.
7. FOR TRANSVERSE SAWED CONTRACTION, TRANSVERSE FORMED EXPANSION JOINT, AND ISOLATION JOINT USE JOINT SEALANT CLASS 5 OR 8 AT NEW JOINTS. USE JOINT SEALANT CLASS 4,5,7,OR 8 FOR MAINTAINING EXISTING JOINTS.
8. THE JOINTS SHALL BE CLEANED IN ACCORDANCE WITH THE ITEM 438 "CLEANING AND SEALING JOINTS" OR ITEM 713 "CLEANING AND SEALING JOINTS AND CRACKS (CONCRETE PAVEMENT)".
9. ISOLATION JOINTS ACCOMMODATE HORIZONTAL AND VERTICAL MOVEMENTS THAT OCCUR BETWEEN A PAVEMENT AND A STRUCTURE. ISOLATION JOINTS MAY BE USED FOR BRIDGE ABUTMENTS, INTERSECTIONS, CURB AND GUTTER, OLD AND NEW PAVEMENTS, OR AROUND DRAINAGE INLETS, MANHOLES, FOOTINGS AND LIGHTING STRUCTURES.

Texas Department of Transportation | Design Division Standard

CONCRETE PAVING DETAILS

JOINT SEALS

JS-14

FILE: js14.dgn	DN: TxDOT	DN: HC	DW: HC	CK: AN
©TxDOT: DECEMBER 2014	CONT	SECT	JOB	HIGHWAY
REVISIONS				
	DIST	COUNTY		SHEET NO.

DATE:
FILE:

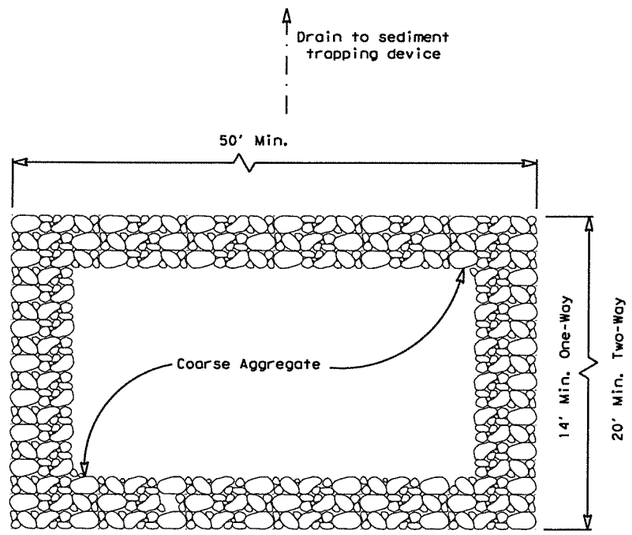

PLAN VIEW

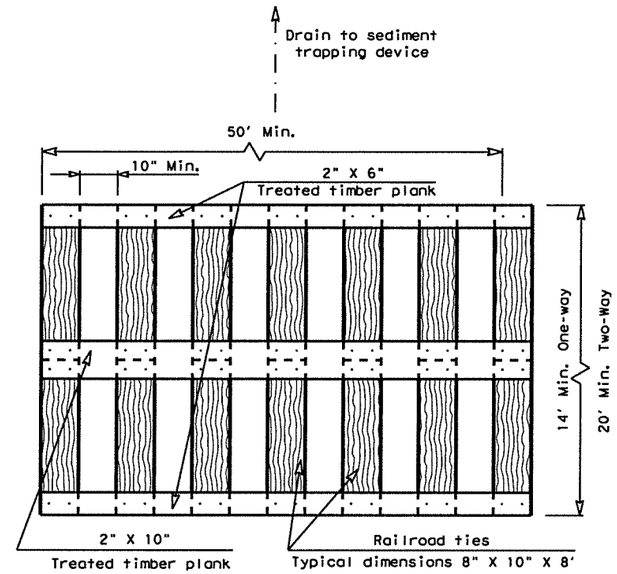

PLAN VIEW

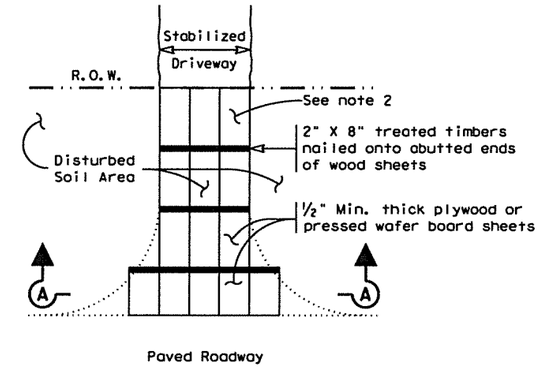

PLAN VIEW

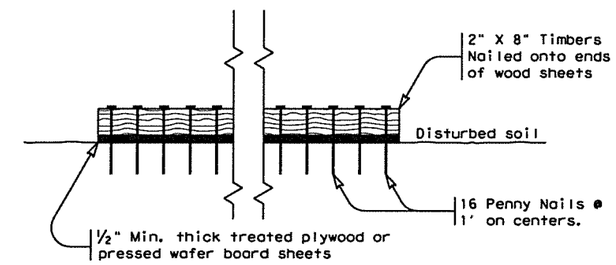

SECTION A-A

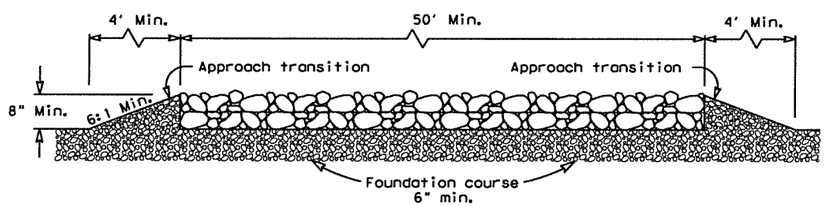

ELEVATION VIEW

CONSTRUCTION EXIT (TYPE 1)

ROCK CONSTRUCTION (LONG TERM)

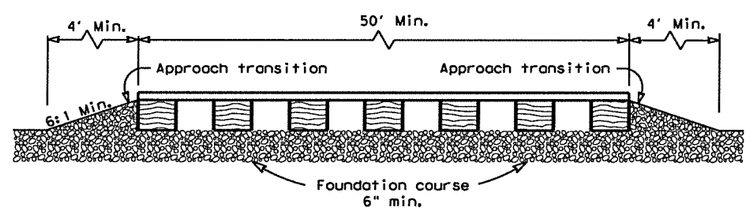

ELEVATION VIEW

CONSTRUCTION EXIT (TYPE 2)

TIMBER CONSTRUCTION (LONG TERM)

SECTION A-A

CONSTRUCTION EXIT (TYPE 3)

SHORT TERM

GENERAL NOTES (TYPE 1)

1. The length of the type 1 construction exit shall be as indicated on the plans, but not less than 50'.
2. The coarse aggregate should be open graded with a size of 4" to 8".
3. The approach transitions should be no steeper than 6:1 and constructed as directed by the Engineer.
4. The construction exit foundation course shall be flexible base, bituminous concrete, portland cement concrete or other materialas approved by the Engineer.
5. The construction exit shall be graded to allow drainage to a sediment trapping device.
6. The guidelines shown hereon are suggestions only and may be modified by the Engineer.
7. Construct exits with a width of at least 14 ft. for one-way and 20 ft. for two-way traffic for the full width of the exit, or as directed by the engineer.

GENERAL NOTES (TYPE 2)

1. The length of the type 2 construction exit shall be as indicated on the plans, but not less than 50'.
2. The treated timber planks shall be attached to the railroad ties with ½"x 6" min. lag bolts. Other fasteners may be used as approved by the Engineer.
3. The treated timber planks shall be #2 grade min., and should be free from large and loose knots.
4. The approach transitions shall be no steeper than 6:1 and constructed as directed by the Engineer.
5. The construction exit foundation course shall be flexible base, bituminous concrete, portland cement concrete or other material as approved by the Engineer.
6. The construction exit should be graded to allow drainage to a sediment trapping device.
7. The guidelines shown hereon are suggestions only and may be modified by the Engineer.
8. Construct exits with a width of at least 14 ft. for one-way and 20 ft. for two-way traffic for the full width of the exit, or as directed by the engineer.

GENERAL NOTES (TYPE 3)

1. The length of the type 3 construction exit shall be as shown on the plans, or as directed by the Engineer.
2. The type 3 construction exit may be constructed from open graded crushed stone with a size of two to four inches spread a min. of 4" thick to the limits shown on the plans.
3. The treated timber planks shall be #2 grade min., and should be free from large and loose knots.
4. The guidelines shown hereon are suggestions only and may be modified by the Engineer.

Texas Department of Transportation — Design Division Standard

TEMPORARY EROSION, SEDIMENT AND WATER POLLUTION CONTROL MEASURES

CONSTRUCTION EXITS

EC(3)-16

FILE: ec316	DN: TxDOT	CK: KM	DW: VP	DN/CK: LS
©TxDOT: JULY 2016	CONT	SECT	JOB	HIGHWAY
REVISIONS	C	S	J	HWY
	DIST	COUNTY		SHEET NO.
	DST	CTY		$EC(3A-1)

DISCLAIMER:
The use of this standard is governed by the "Texas Engineering Practice Act". No warranty of any kind is made by TxDOT for any purpose whatsoever. TxDOT assumes no responsibility for the conversion of this standard to other formats or for incorrect results or damages resulting from its use.

DATE: $DATE$
FILE: $FILE$

DISCLAIMER:
The use of this standard is governed by the "Texas Engineering Practice Act". No warranty of any kind is made by TxDOT for any purpose whatsoever. TxDOT assumes no responsibility for the conversion of this standard to other formats or for incorrect results or damages resulting from its use.

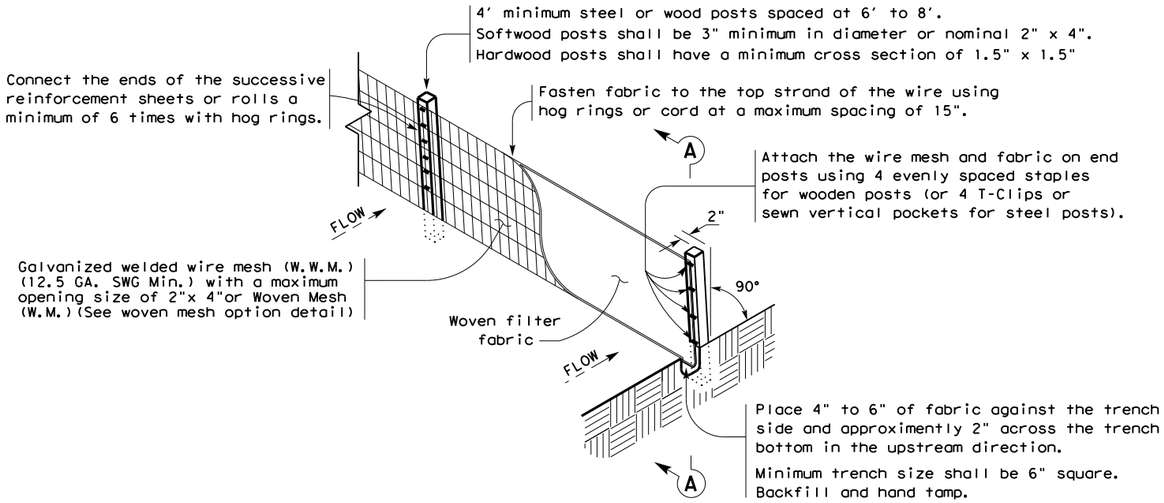

TEMPORARY SEDIMENT CONTROL FENCE

SCF

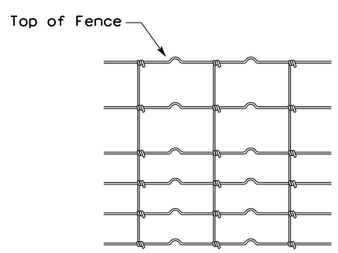

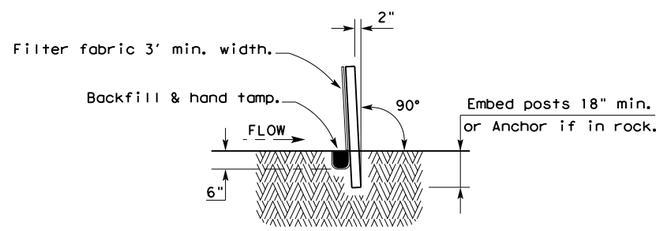

SECTION A-A

HINGE JOINT KNOT WOVEN MESH (OPTION) DETAIL

Galvanized hinge joint knot woven mesh (12.5 GA.SWG Min.) requires a minimum of five horizontal wires spaced at a maximum of 12 inches apart and all vertical wires spaced at a maximum of 12 inches apart.

SEDIMENT CONTROL FENCE USAGE GUIDELINES

A sediment control fence may be constructed near the downstream perimeter of a disturbed area along a contour to intercept sediment from overland runoff. A 2 year storm frequency may be used to calculate the flow rate to be filtered.

Sediment control fence should be sized to filter a maximum flow through rate of 100 GPM/FT^2. Sediment control fence is not recommended to control erosion from a drainage area larger than 2 acres.

LEGEND

Sediment Control Fence

SCF

GENERAL NOTES

1. Vertical tracking is required on projects where soil distributing activities have occurred unless otherwise approved.
2. Perform vertical tracking on slopes to temporarily stabilize soil.
3. Provide equipment with a track undercarriage capable of producing linear soil impressions measuring a minimum of 12" in length by 2" to 4" in width by 1/2" to 2" in depth.
4. Do not exceed 12" between track impressions.
5. Install continous linear track impressions where the minimum 12" length impressions are perpendicular to the slope or direction of water flow.

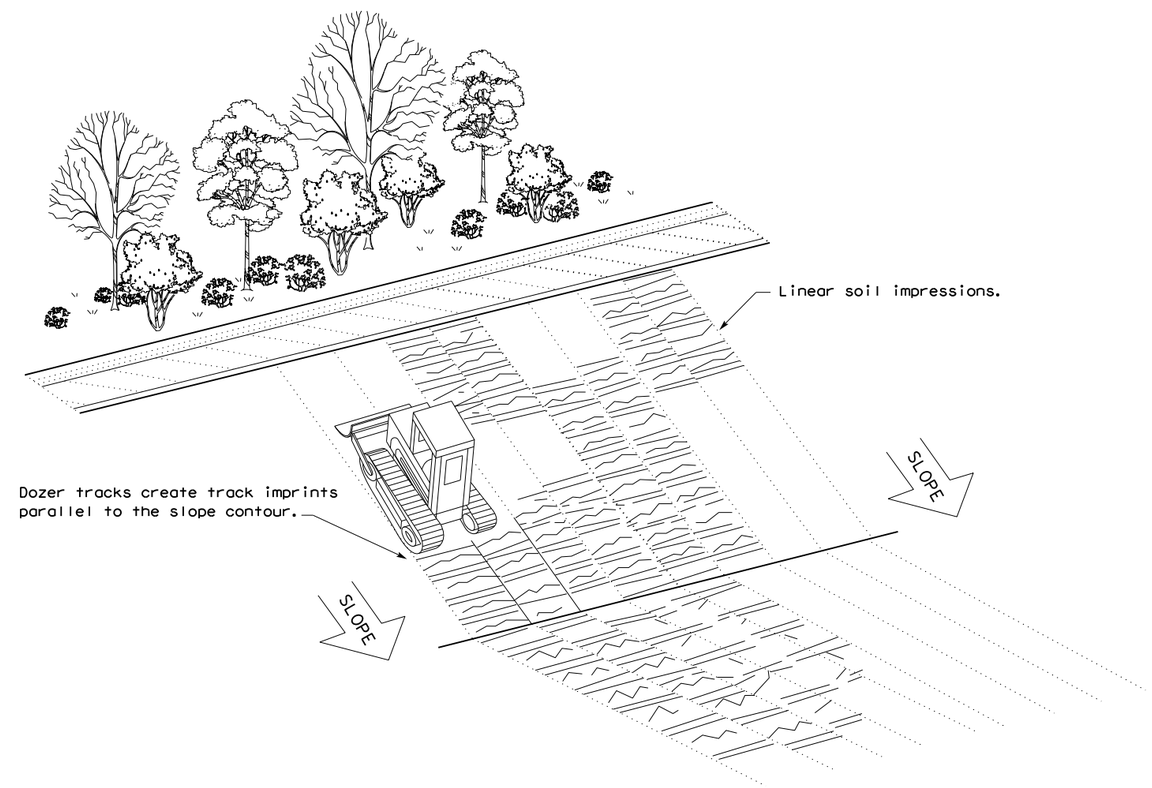

VERTICAL TRACKING

Texas Department of Transportation

Design Division Standard

TEMPORARY EROSION, SEDIMENT AND WATER POLLUTION CONTROL MEASURES

FENCE & VERTICAL TRACKING

EC(1)-16

FILE: ec116	DN: TxDOT	CK: KM	DW: VP	DN/CK: LS
© TxDOT: JULY 2016	CONT	SECT	JOB	HIGHWAY
REVISIONS				
	DIST	COUNTY		SHEET NO.

DATE
FILE

DISCLAIMER:
The use of this standard is governed by the "Texas Engineering Practice Act". No warranty of any kind is made by TxDOT for any purpose whatsoever. TxDOT assumes no responsibility for the conversion of this standard to other formats or for incorrect results or damages resulting from its use.

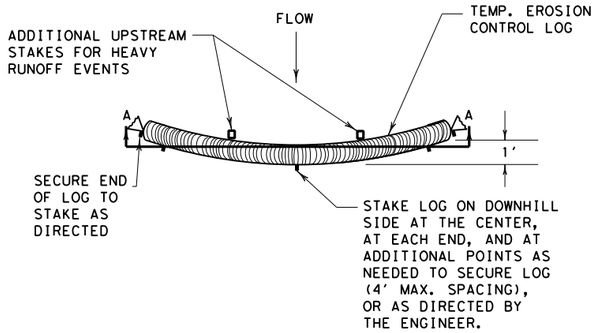

PLAN VIEW

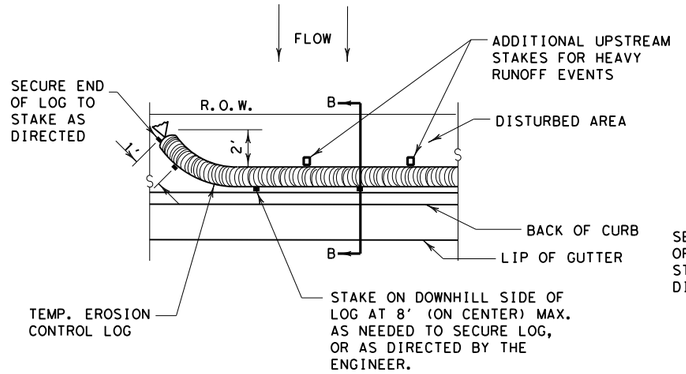

PLAN VIEW

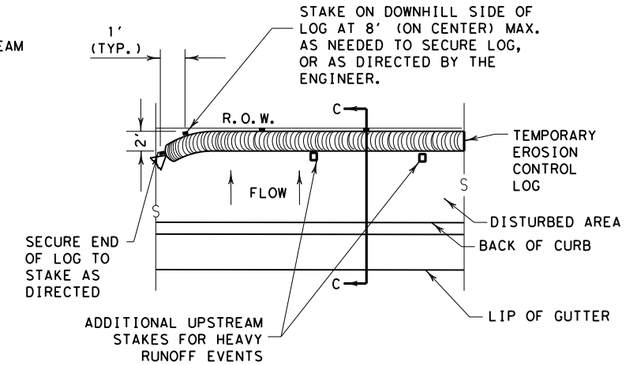

PLAN VIEW

GENERAL NOTES:

1. EROSION CONTROL LOGS SHALL BE INSTALLED IN ACCORDANCE WITH MANFACTURER'S RECOMMENDATIONS, OR AS DIRECTED BY THE ENGINEER.
2. LENGTHS OF EROSION CONTROL LOGS SHALL BE IN ACCORDANCE WITH MANUFACTURER'S RECOMMENDATIONS AND AS REQUIRED FOR THE PURPOSE INTENDED.
3. UNLESS OTHERWISE DIRECTED, USE BIODEGRADABLE OR PHOTODEGRADABLE CONTAINMENT MESH ONLY WHERE LOG WILL REMAIN IN PLACE AS PART OF A VEGETATIVE SYSTEM. FOR TEMPORARY INSTALLATIONS, USE RECYCLABLE CONTAINMENT MESH.
4. FILL LOGS WITH SUFFICIENT FILTER MATERIAL TO ACHIEVE THE MINIMUM COMPACTED DIAMETER SPECIFIED IN THE PLANS WITHOUT EXCESSIVE DEFORMATION.
5. STAKES SHALL BE 2" X 2" WOOD OR #3 REBAR, 2'-4' LONG, EMBEDDED SUCH THAT 2" PROTRUDES ABOVE LOG, OR AS DIRECTED BY THE ENGINEER.
6. DO NOT PLACE STAKES THROUGH CONTAINMENT MESH.
7. COMPOST CRADLE MATERIAL IS INCIDENTAL & WILL NOT BE PAID FOR SEPARATELY.
8. SANDBAGS USED AS ANCHORS SHALL BE PLACED ON TOP OF LOGS & SHALL BE OF SUFFICIENT SIZE TO HOLD LOGS IN PLACE.
9. TURN THE ENDS OF EACH ROW OF LOGS UPSLOPE TO PREVENT RUNOFF FROM FLOWING AROUND THE LOG.
10. FOR HEAVY RUNOFF EVENTS, ADDITIONAL UPSTREAM STAKES MAY BE NECESSARY TO KEEP LOG FROM FOLDING IN ON ITSELF.

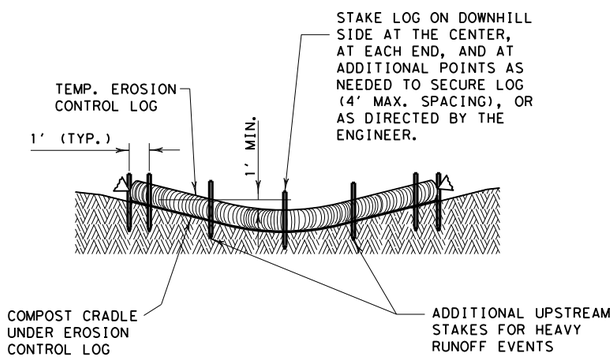

SECTION A-A

EROSION CONTROL LOG DAM

CL-D

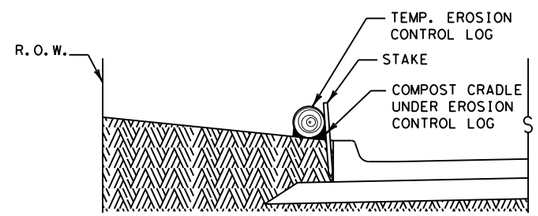

SECTION B-B

EROSION CONTROL LOG AT BACK OF CURB

CL-BOC

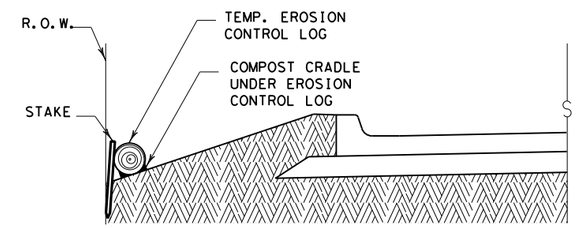

SECTION C-C

EROSION CONTROL LOG AT EDGE OF RIGHT-OF-WAY

CL-ROW

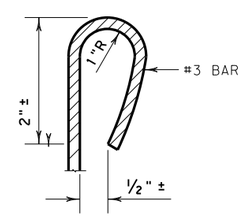

REBAR STAKE DETAIL

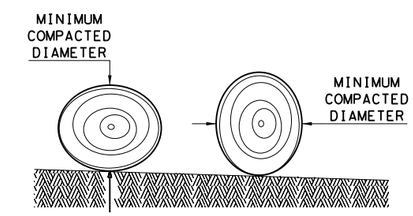

DIAMETER MEASUREMENTS OF EROSION CONTROL LOGS SPECIFIED IN PLANS

LEGEND

- CL-D — EROSION CONTROL LOG DAM
- CL-BOC — EROSION CONTROL LOG AT BACK OF CURB
- CL-ROW — EROSION CONTROL LOG AT EDGE OF RIGHT-OF-WAY
- CL-SST — EROSION CONTROL LOGS ON SLOPES STAKE AND TRENCHING ANCHORING
- CL-SSL — EROSION CONTROL LOGS ON SLOPES STAKE AND LASHING ANCHORING
- CL-DI — EROSION CONTROL LOG AT DROP INLET
- CL-CI — EROSION CONTROL LOG AT CURB INLET
- CL-GI — EROSION CONTROL LOG AT CURB & GRATE INLET

SEDIMENT BASIN & TRAP USAGE GUIDELINES

An erosion control log sediment trap may be used to filter sediment out of runoff draining from an unstabilized area.

Log Traps: The drainage area for a sediment trap should not exceed 5 acres. The trap capacity should be 1800 CF/Acre (0.5" over the drainage area).

Control logs should be placed in the following locations:

1. Within drainage ditches spaced as needed or min. 500' on center
2. Immediately preceding ditch inlets or drain inlets
3. Just before the drainage enters a water course
4. Just before the drainage leaves the right of way
5. Just before the drainage leaves the construction limits where drainage flows away from the project.

The logs should be cleaned when the sediment has accumulated to a depth of 1/2 the log diameter.

Cleaning and removal of accumulated sediment deposits is incidental and will not be paid for separately.

SHEET 1 OF 3

Texas Department of Transportation — Design Division Standard

TEMPORARY EROSION, SEDIMENT AND WATER POLLUTION CONTROL MEASURES

EROSION CONTROL LOG

EC(9)-16

FILE: ec916	DN: TxDOT	CK: KM	DW: LS/PT	CK: LS
© TxDOT: JULY 2016	CONT	SECT	JOB	HIGHWAY
REVISIONS	DIST	COUNTY		SHEET NO.

DATE:
FILE:

DISCLAIMER:
The use of this standard is governed by the "Texas Engineering Practice Act". No warranty of any kind is made by TxDOT for any purpose whatsoever. TxDOT assumes no responsibility for the conversion of this standard to other formats or for incorrect results or damages resulting from its use.

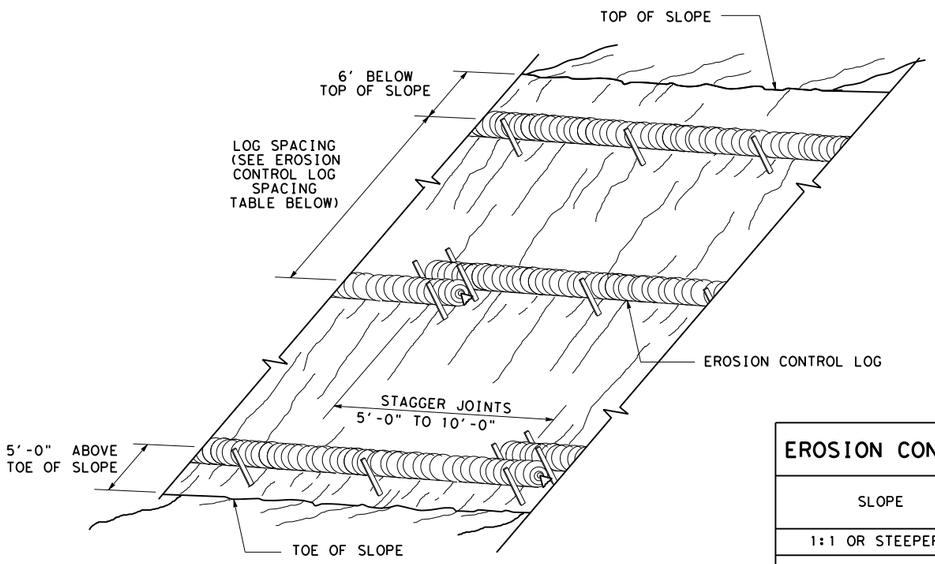

EROSION CONTROL LOGS ON SLOPES
STAKE AND TRENCHING ANCHORING

CL-SST

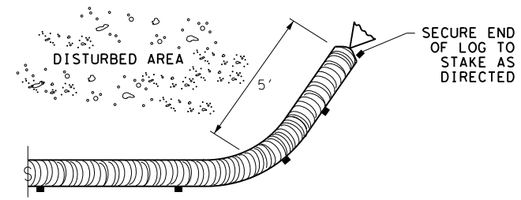

END SECTION RAP DETAIL

EROSION CONTROL LOG SPACING TABLE				
SLOPE	LOG DIAMETER			
	6"	8"	12"	18"
1:1 OR STEEPER	5'	10'	15'	20'
2:1	10'	20'	30'	40'
3:1	15'	30'	45'	60'
4:1 OR FLATTER	20'	40'	60'	80'

* ADJUSTMENTS CAN BE MADE FOR SOIL TYPE:
SOFT, LOAMY SOILS-ADJUST ROWS CLOSER TOGETHER;
HARD, ROCKY SOILS- ADJUST ROWS FARTHER APART

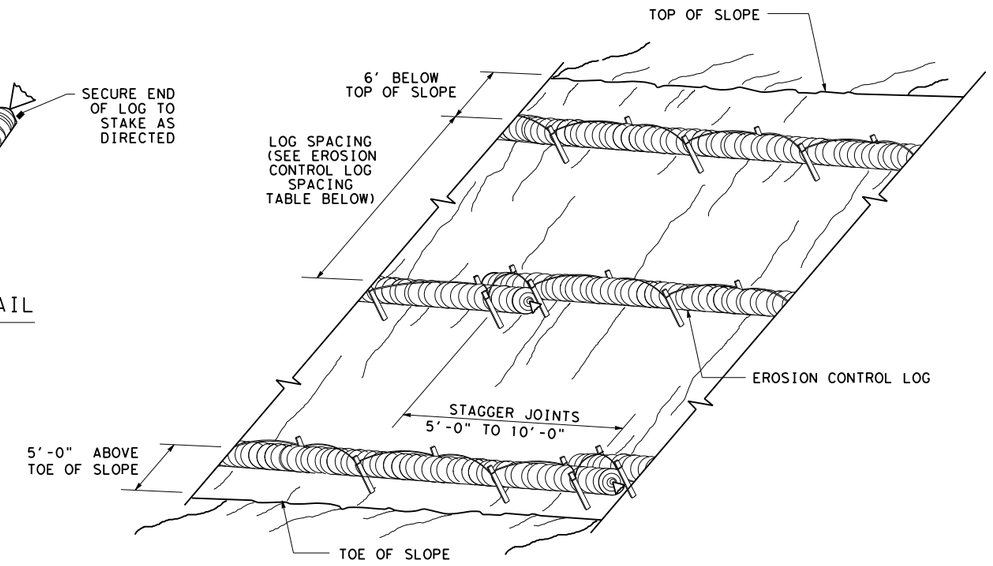

EROSION CONTROL LOGS ON SLOPES
STAKE AND LASHING ANCHORING

CL-SSL

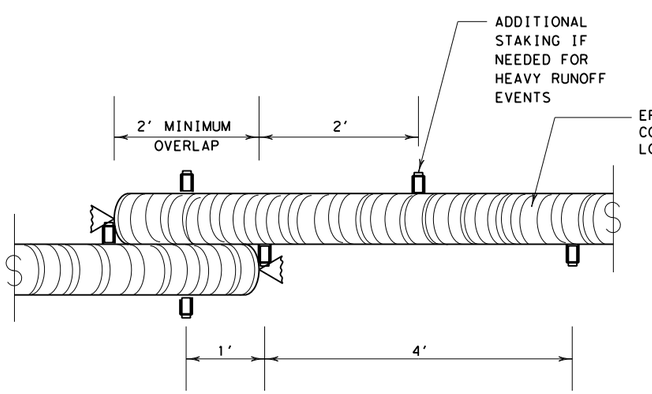

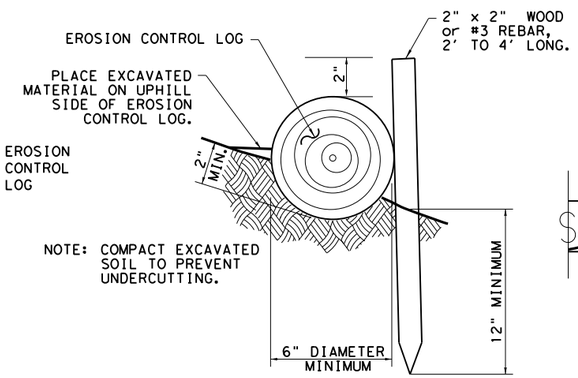

STAKE AND TRENCHING ANCHORING DETAIL

CL-SST

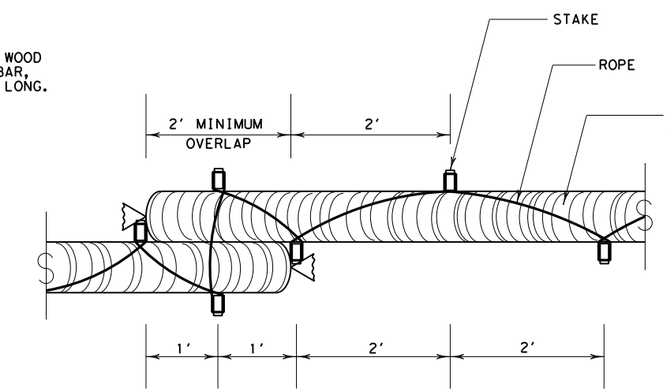

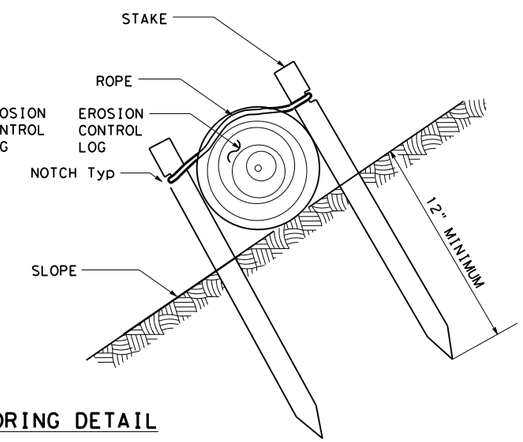

STAKE AND LASHING ANCHORING DETAIL

CL-SSL

TRENCH DEPTH TABLE	
LOG DIAMETER	DEPTH
6"	2"
8"	3"
12"	4"
18"	5"

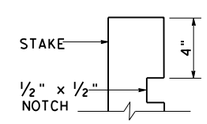

STAKE NOTCH DETAIL

SHEET 2 OF 3

Texas Department of Transportation — Design Division Standard

TEMPORARY EROSION, SEDIMENT AND WATER POLLUTION CONTROL MEASURES
EROSION CONTROL LOG
EC(9)-16

FILE: ec116	DN: TxDOT	CK: KM	DW: LS/PT	CK: LS
© TxDOT: JULY 2016	CONT	SECT	JOB	HIGHWAY
REVISIONS	DIST	COUNTY		SHEET NO.

DATE:
FILE:

DISCLAIMER:
The use of this standard is governed by the "Texas Engineering Practice Act". No warranty of any kind is made by TxDOT for any purpose whatsoever. TxDOT assumes no responsibility for the conversion of this standard to other formats or for incorrect results or damages resulting from its use.

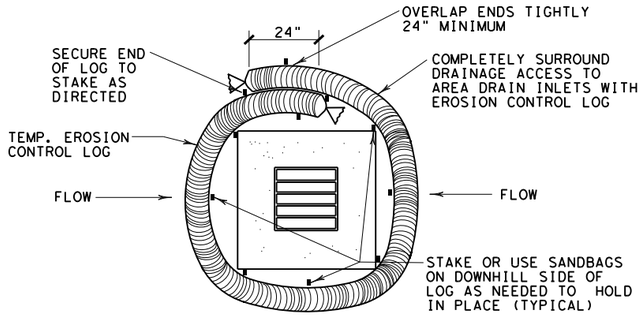

EROSION CONTROL LOG AT DROP INLET

CL-DI

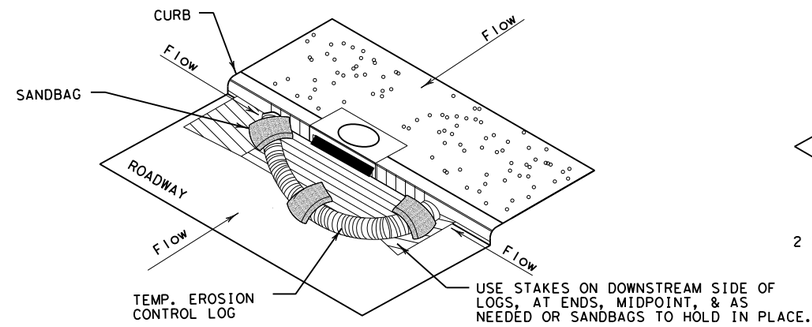

EROSION CONTROL LOG AT CURB INLET

CL-CI

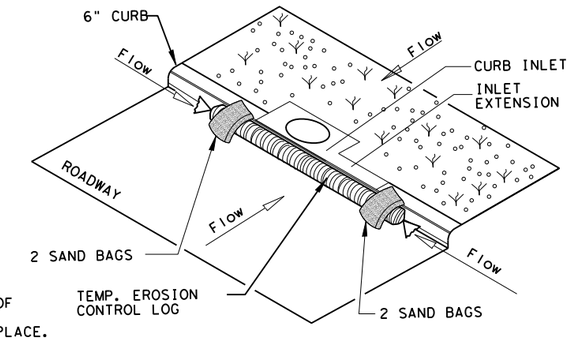

EROSION CONTROL LOG AT CURB INLET

CL-CI

NOTE:
EROSION CONTROL LOGS USED AT CURB INLETS SHOULD ONLY BE USED IF THEY WILL NOT IMPEDE TRAFFIC OR FLOOD THE ROADWAY OR WHEN THE STORM SEWER SYSTEM IS NOT FULLY FUNCTIONAL.

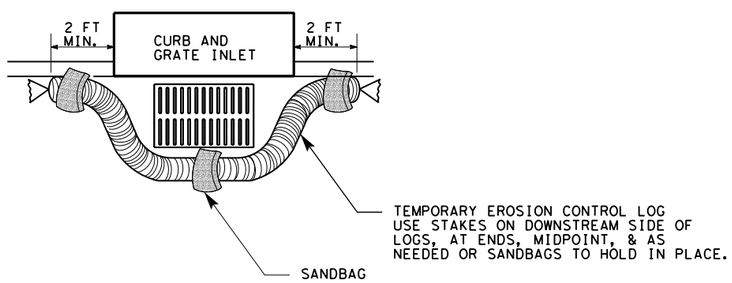

EROSION CONTROL LOG AT CURB & GRADE INLET

CL-GI

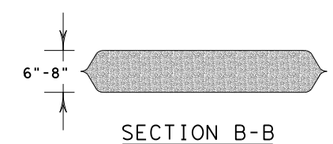

SECTION B-B

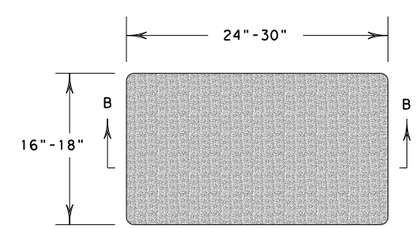

SANDBAG DETAIL

SHEET 3 OF 3

Texas Department of Transportation

Design Division Standard

TEMPORARY EROSION, SEDIMENT AND WATER POLLUTION CONTROL MEASURES

EROSION CONTROL LOG

EC(9)-16

FILE: ec916	DN: TxDOT	CK: KM	DW: LS/PT	CK: LS
© TxDOT: JULY 2016	CONT	SECT	JOB	HIGHWAY
REVISIONS				
	DIST	COUNTY		SHEET NO.

DATE:
FILE:

JEFFERSON COUNTY DRAINAGE DISTRICT NO.6

PLANS FOR
BASIN & Ditch 202–E1E AT UPRR

BOARD OF DIRECTORS

PRESIDENT:	JOSHUA W. ALLEN, SR.
VICE PRESIDENT:	BERNIE DALEO
SECRETARY:	CHARLES GUILLORY
DIRECTOR:	ANTHONY MALLEY, III
DIRECTOR:	CHARLES KIKER, III

GENERAL MANAGER

DR. JOSEPH G. MAJDALANI, P.E., C.F.M.

PROJECT:	**Ditch 202–E1E & Basin at UPRR**
PROJECT LOCATION:	Beaumont, Texas
COUNTY:	Jefferson County
DESCRIPTION:	For the renovation of ditch 202-E1E and a basin on property owned by Jefferson County Drainage District NO.6.

SHEET INDEX

01 TITLE SHEET
02 GENERAL NOTES & SPECS
03 MATERIALS AND QUANTITIES
04 PLAN VIEW OF UPRR & PHELAN
05 UPPR PLAN VIEW
06 UPRR SECTIONS
07 UPRR ZONE LIMITS
08 UPRR ESL & WSE DATA

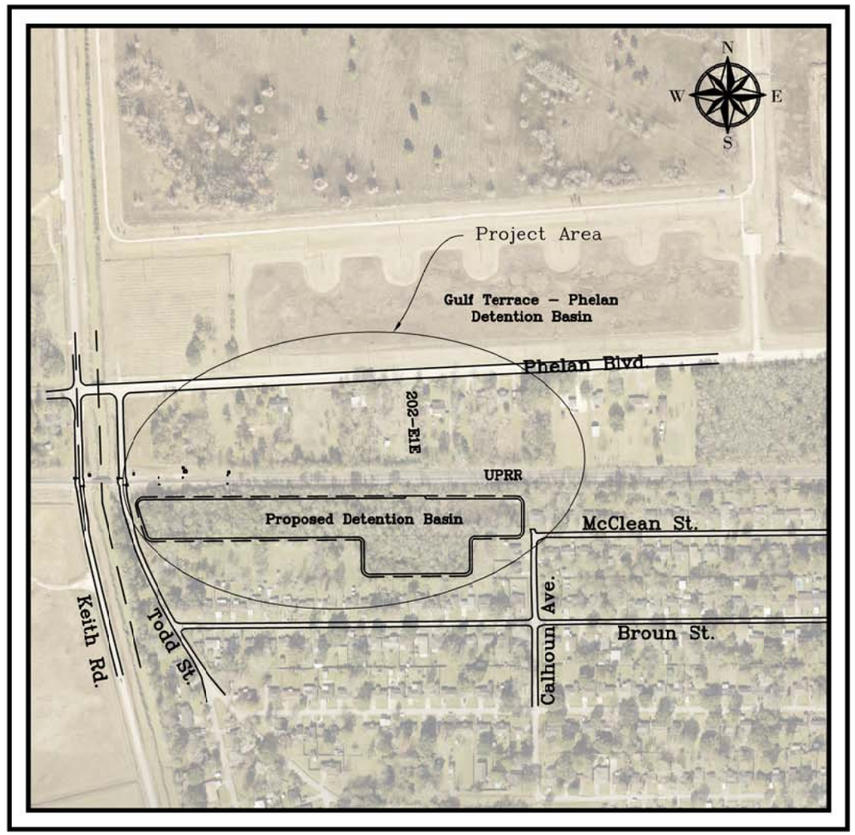

LOCATION MAP
SCALE: NTS

December 2021

STATE OF TEXAS
WALLACE R. WILSON
84857
LICENSED
PROFESSIONAL ENGINEER

Wallace R. Wilson P.E. 12/15/21

DATE

General Notes and Specifications

1. The Texas Department of Transportation Standard Specifications for Construction and Maintenance of Highways, Streets, and Bridges, Adopted November 2014, and AREMA, American Railway Engineering and Maintenance-of-Way Association, current Publication will govern all specifications not directly addressed in this document.

2. Before excavating near existing utilities, contact the utility companies or the utility coordinating committee for exact locations to prevent damage or interference with present facilities. Notify the utility coordinating committee and the Texas One Call System at the following numbers:

Texas One Call, toll-free 1-800-245-4545

AT&T Communications	Entergy Distribution	CenterPoint Energy Entex
555 Main - Room 20760	North 11th Street	6090 College
Beaumont, Texas 77701	Beaumont, Texas 77701	Beaumont, Texas 77707
(409) 839-1666	(409) 785-2136	(409) 860-7111
Ray Hillin	Brian Cross	Robert Young
Spectrum	City of Beaumont	City of Beaumont
602 N. Hwy 69	City Utilities	Public Works-Engineering
Nederland, Texas 77627	(409) 785-4720	(409) 880-3725
(409) 720-5565	Edward Brown	Molly Villarreal, P.E.
Adam LaRive		

This action does not relieve the Contractor of the responsibilities under the terms of the contract or the plans and specifications. Damage caused by the Contractor's operations shall be repaired and restored to service in a timely manner at no expense to DD6.

3. The approximate location of the known underground utility installations is as shown on the plans. Confirm the location of these utility lines and the exact location of any others which may exist. Assume full responsibility for notifying the utility involved in case of conflict or damage and he/she shall be responsible for damage that occurs due to his/her negligence. Remove and dispose of abandoned lines encountered that interfere with the construction of this project. Consider this work to be subsidiary to the various bid items of the contract.

4. The bore shall progress continuously (24/7, without stoppage) until the leading edge of the pipe has completely passed under all tracks and through Zone A, as shown in "Track Protection Shoring Requirements."

5. The front of the pipe shall be provided with mechanical arrangements or devices that will positively prevent the auger from leading the pipe so that no unsupported excavation is ahead of the pipe while within Zone A and under the tracks.

6. The auger and cutting head arrangement shall be removable from within the pipe in the event an obstruction is encountered and needs to be removed.

7. The over-cut by the cutting head shall not exceed the outside diameter of the pipe (plus coating) by that approximately 1 inch, grouting or other methods approved by the Railroad, shall be employed to fill such voids.

8. The face of the cutting edge shall be arranged to restrict an otherwise free flow material leading to over excavating material ahead/above the pipe.

9. Work plans and description of the equipment to be used shall be submitted to the Railroad for approval and no work shall proceed until such approval is obtained.

10. UPPR "Call Before You Dig" (CBYD) phone number - 1-800-336-9193.

Railroad Pipeline or Culvert Accommodation Notes

1. The contractor must submit a proposed method of erosion and sediment control and have the method approved by the Railroad.
2. Regardless of underlying land ownership, all shoring systems within Railroad right-of-way or that may impact the Railroad's operations and/or supports the Railroad's embankment shall be designed and constructed per current Railroad guidelines for Temporary Shoring.
3. The contractor must submit and provide sufficient safety measures to protect the unattended excavations to the Railroad for approval.
4. All demolitions/removals within the Railroad's right-of-way and/or that may impact the Railroad's tracks or operations shall be in compliance with the current Railroad's Demolition Guidelines.
5. Railroad requirements do not allow work within 50 feet of track centerline when a train passes the work site and all personnel must clear the area within 25 feet of the track centerline and secure all equipment.
6. The contractor shall adhere to the following culvert and pipeline construction requirements while within the Railroad's right-of-way.
   a. The boring operation shall be progressed on a continuous (24/7) basis without stoppage until the leading edge of the pipe has completely passed under all track and through Zone A on each side as shown below:

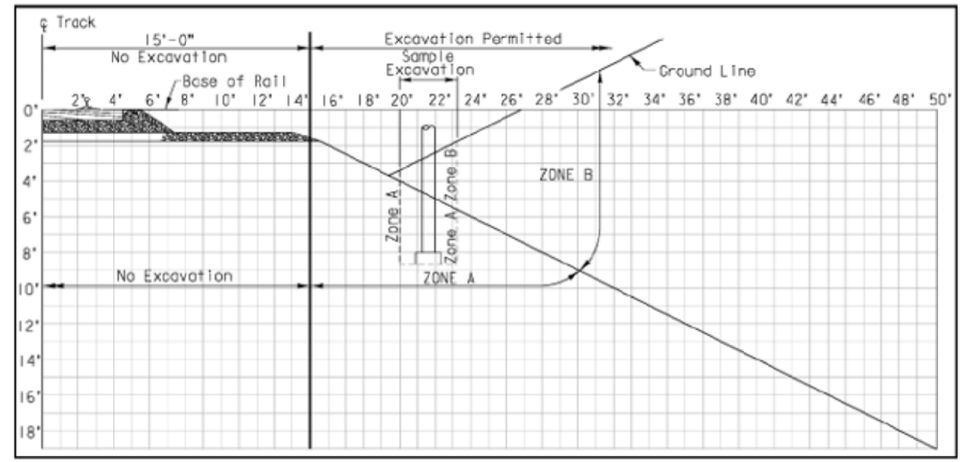

   b. The front of the pipe shall be provided with mechanical arrangements or devices that will positively prevent the auger from leading the pipe so that no unsupported excavation is ahead of the pipe while within Zone A or under the tracks.
   c. The auger and cutting head arrangement shall be removable from within the pipe in the event an obstruction is encountered and needs to be removed.
   d. The over-cut by the cutting head shall not exceed the outside diameter of the pipe (plus coating) by that approximately 1 inch, grouting or other methods approved by the Railroad, shall be employed to fill such voids.
   e. The face of the cutting edge shall be arranged to restrict an otherwise free flow material leading to overexcavating material ahead/above the pipe..
   f. Work plans and description of the equipment to be used shall be submitted to the Railroad for approval and no work shall proceed until such approval is obtained.
7. The contractor must submit a track and ground monitoring plan for Railroad review. See section 3 in the link below.
   The elevation of the existing top-of-rail profile shall be verified before beginning construction and at project closing. As deemed necessary by the Railroad, continuous monitoring may be required as well as monitoring for 14 days after the installation. The contractor will be responsible for all costs associated with monitoring and restoring the track profile as necessary. All discrepancies shall be brought to the attention of the Railroad.
   https://www.up.com/cs/groups/public/@uprr/@realestate/documents/up_pdf_nativedocs/pdf_up_util_aban.pdf
8. When abandoning utilities (leave-in-place or remove), the contractor must submit their plan to the railroad for prior review. See the UPRR Abandonment Guidelines.
   https://www.up.com/cs/groups/public/@uprr/@realestate/documents/up_pdf_nativedocs/pdf_up_util_aban.pdf
9. Call Before You Dig. Prior to excavation, disrupting, or working on the Railroad property the contractor shall locate and protect UPRR facilities by calling the UPRR "Call Before You Dig" (CBYD) phone number: 1-800-336-9193.
10. Construction activities are not allowed within the "Minimum Construction Clearance Envelope" as they would otherwise disrupt Railroad operations.

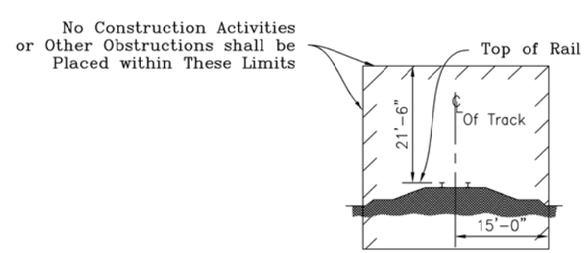

MINIMUM CONSTRUCTION CLEARANCE ENVELOPE
(Normal to Railroad)

PROJECT LOCATION			
CITY	COUNTY	STATE	
BEAUMONT	JEFFERSON	TEXAS	
WATERSHED	DITCH NO.	SHEET	
WILLOW MARSH	202-EIE	02	

General Notes & Specifications
MCLEAN RELIEF PROJECT
WALLACE R. WILSON, P.E. No.84857
DATE 12/15/21

NO.	DATE	DRN	REVISION	APPROV.
1		HEC		
2				
3				
4				
5				
6				

Summary of Quantities	
Location	Item 4610-001 Steel Pipe (5 - 42" Dia X 150' X .625" Wall Thickness) (E80 36ksi) (lf)
UPRR Crossing	750

Estimate					
Item		Description	Unit	Total	
Item No.	Description Code			Estimated Quantity	Final Quantity
4610	001	5 - 42" Dia X 150' Steel Pipe .625" Wall Thickness (E80 36ksi)	lf	750.00	

PROJECT LOCATION

CITY	COUNTY	STATE
BEAUMONT	JEFFERSON	TEXAS
WATERSHED	DITCH NO.	SHEET
WILLOW MARSH	202-E1E	03

DRAINAGE DISTRICT NO. 6 JEFFERSON COUNTY, TEXAS

MATERIAL QUANTITIES

MCLEAN RELIEF PROJECT

WALLACE R. WILSON, P.E. No.84857

DATE 12/15/21

STATE OF TEXAS WALLACE R. WILSON 84857 LICENSED PROFESSIONAL ENGINEER

NO.	DATE	DRN	REVISION	APPROV.
6				
5				
4				
3				
2				
1				

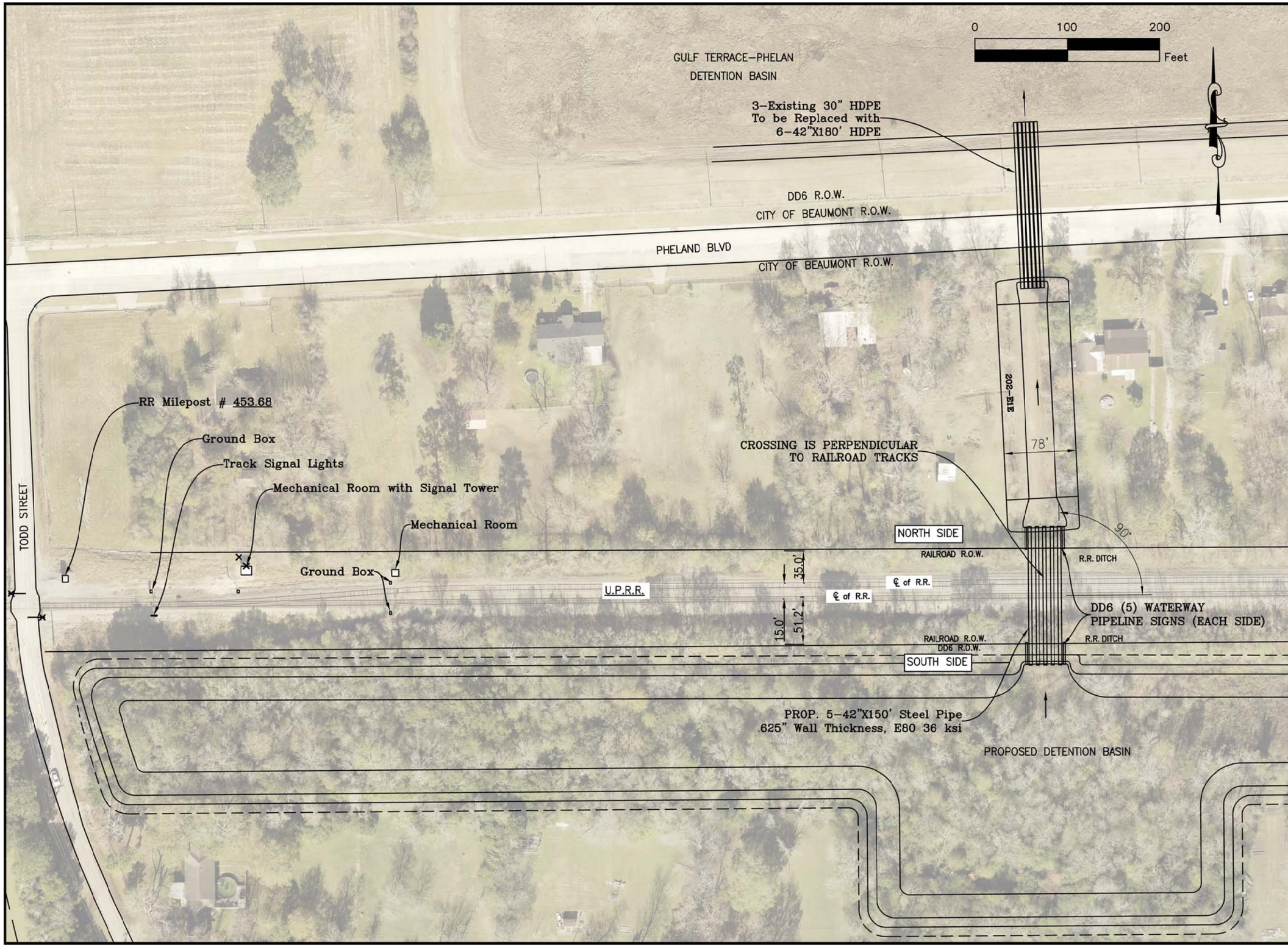

PROJECT LOCATION

CITY	COUNTY	STATE
BEAUMONT	JEFFERSON	TEXAS
WATERSHED	DITCH NO.	SHEET
WILLOW MARSH	202–E1E	04

DRAINAGE DISTRICT NO. 6 JEFFERSON COUNTY, TEXAS

PLAN VIEW of UPRR & PHELAN
MCLEAN RELIEF PROJECT

WALLACE R. WILSON, P.E. No.84857

Walter R. Wilson P.E.

DATE 12/15/21

STATE OF TEXAS
WALLACE R. WILSON
84857
LICENSED PROFESSIONAL ENGINEER

NO.	DATE	DRN	REVISION	APPROV.
6				
5				
4				
3				
2				
1				

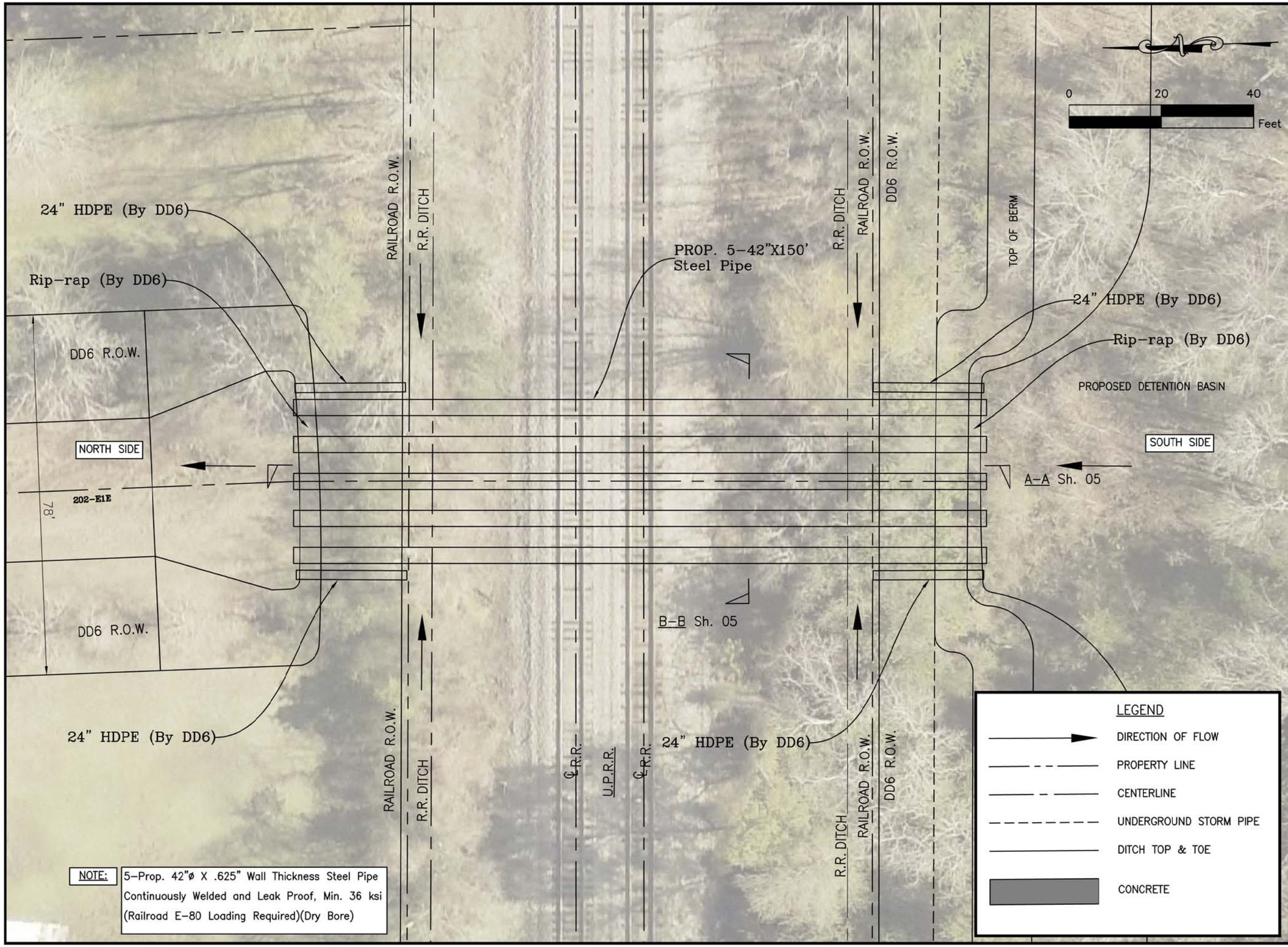

PROJECT LOCATION

CITY	COUNTY	STATE
BEAUMONT	JEFFERSON	TEXAS
WATERSHED	DITCH NO.	SHEET
WILLOW MARSH	202-E1E	05

DRAINAGE DISTRICT NO. 6 JEFFERSON COUNTY, TEXAS

UPRR PLAN VIEW
MCLEAN RELIEF PROJECT

WALLACE R. WILSON, P.E. No.84857

DATE 12/15/21

STATE OF TEXAS
WALLACE R. WILSON
84857
LICENSED PROFESSIONAL ENGINEER

NO.	DATE	DRN	REVISION	APPROV.
6				
5				
4				
3				
2				
1				

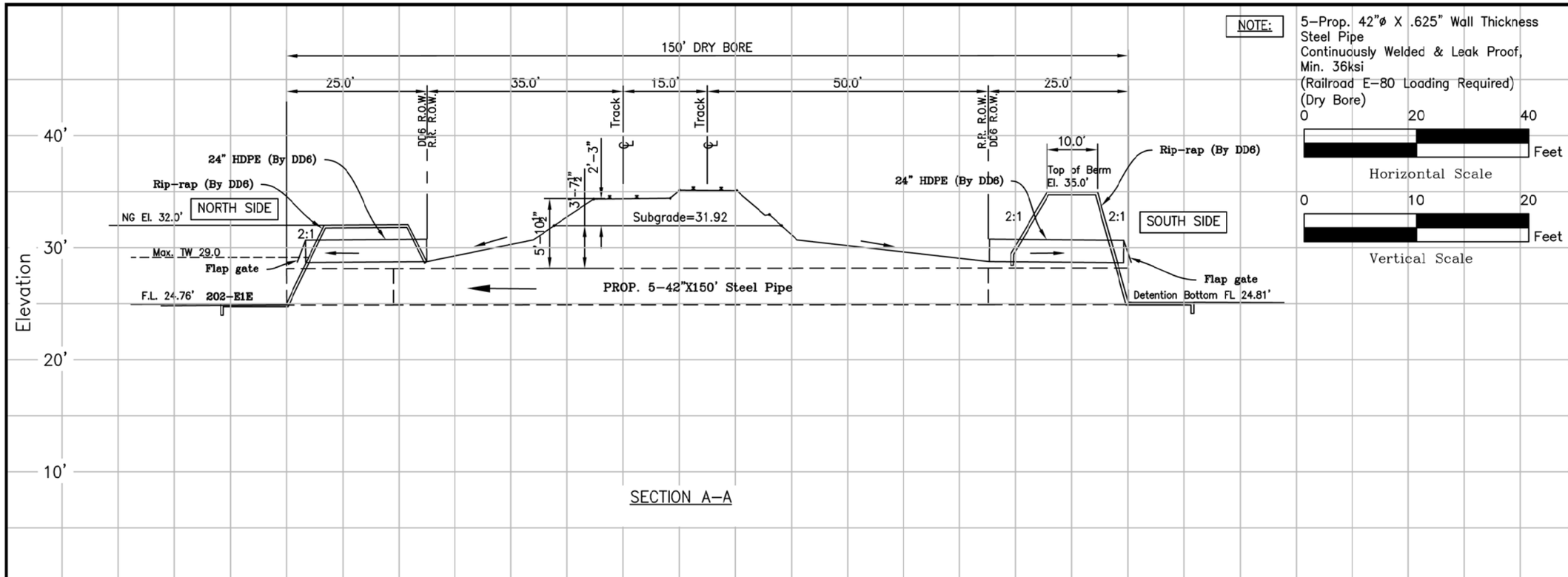

SECTION A-A

NOTE:

5-Prop. 42"ø X .625" Wall Thickness
Steel Pipe
Continuously Welded & Leak Proof,
Min. 36ksi
(Railroad E-80 Loading Required)
(Dry Bore)

0 20 40 Feet
Horizontal Scale

0 10 20 Feet
Vertical Scale

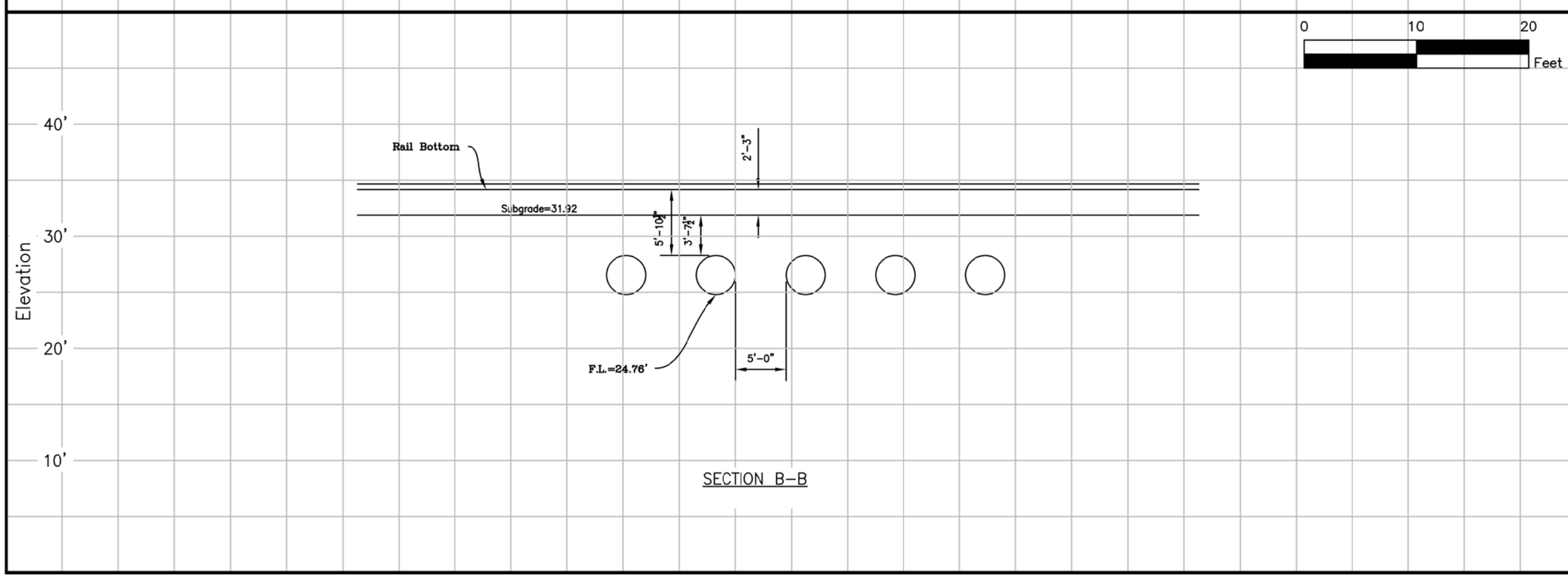

SECTION B-B

PROJECT LOCATION			
CITY	COUNTY	STATE	
BEAUMONT	JEFFERSON	TEXAS	
WATERSHED	DITCH NO.	SHEET	
Willow Marsh	202-E1E	06	

DRAINAGE DISTRICT NO. 6 JEFFERSON COUNTY, TEXAS

UPRR SECTIONS
MCLEAN RELIEF PROJECT

WALLACE R. WILSON, P.E. No.84857

Wallace R. Wilson P.E.

DATE 12/15/21

STATE OF TEXAS
WALLACE R. WILSON
84857
LICENSED
PROFESSIONAL ENGINEER

NO.	DATE	DRN	REVISION	APPROV.
6				
5				
4				
3				
2				
1				

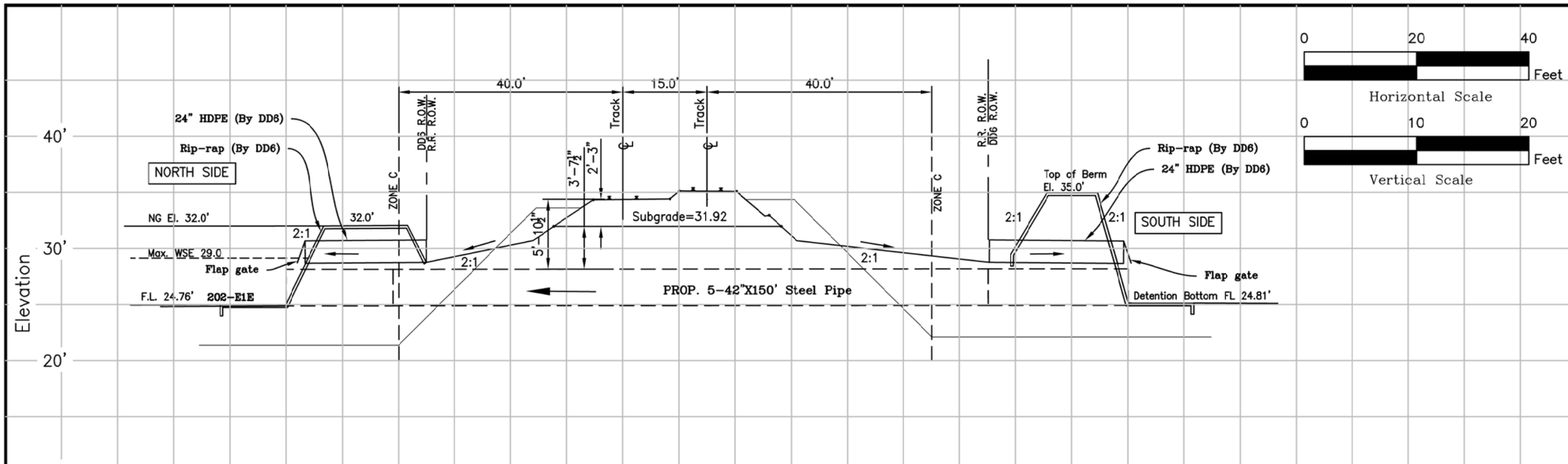

SECTION A–A
GENERAL EXCAVATION ZONE C

GENERAL NOTES:
1. All dimensions are measured perpendicular to the ℄ of track.
2. All excavation will be outside of Zone C.
3. Shoring to comply with OSHA Standards.

PROJECT LOCATION			
CITY	COUNTY	STATE	
BEAUMONT	JEFFERSON	TEXAS	
WATERSHED	DITCH NO.	SHEET	
Willow Marsh	202-E1E	07	

UPRR ZONE LIMITS
MCLEAN RELIEF PROJECT

WALLACE R. WILSON, P.E. No.84857
Walter R. Wilson P.E.
DATE 12/15/21

STATE OF TEXAS
WALLACE R. WILSON
84857
LICENSED PROFESSIONAL ENGINEER

NO.	DATE	DRN	REVISION	APPROV.
6				
5				
4				
3				
2				
1				

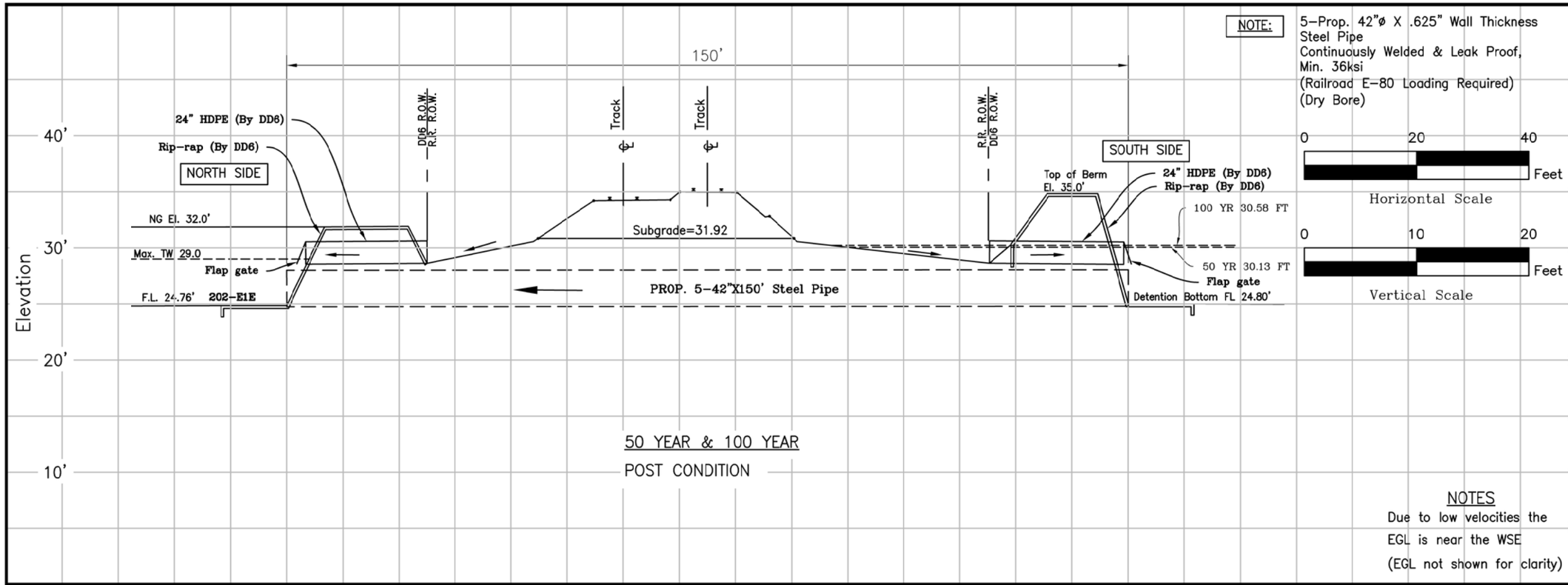

NOTE:

5-Prop. 42"ø X .625" Wall Thickness Steel Pipe
Continuously Welded & Leak Proof, Min. 36ksi
(Railroad E-80 Loading Required)
(Dry Bore)

0 20 40 Feet
Horizontal Scale

0 10 20 Feet
Vertical Scale

50 YEAR & 100 YEAR
POST CONDITION

NOTES
Due to low velocities the EGL is near the WSE
(EGL not shown for clarity)

PROJECT LOCATION			
CITY	COUNTY	STATE	
BEAUMONT	JEFFERSON	TEXAS	
WATERSHED	DITCH NO.	SHEET	
Willow Marsh	202-E1E	08	

UPRR EGL & WSE DATA
MCLEAN RELIEF PROJECT

WALLACE R. WILSON, P.E. No.84857
Walter R. Wilson P.E.
DATE 12/15/21

STATE OF TEXAS
WALLACE R. WILSON
84857
LICENSED PROFESSIONAL ENGINEER

NO.	DATE	DRN	REVISION	APPROV.
6				
5				
4				
3				
2				
1				

STANDARD DETAILS
TABLE OF CONTENTS

Description **Page #**

- Typical Precast Manhole Detail..... H-1
- Typical Fiberglass Manhole-For Sewer Mains Less Than 48" H-2
- Typical Connection to New Manhole for Slip-Line Sewer Mains…..... H-5
- Section "A-A" of Typical Liner Connection to New Manhole…..... H-6
- Manhole over existing Large Line (36" and up)…….....H-7
- Shallow Manhole Detail……..... H-8
- Typical Manhole for Pipebursting……..... H-9
- Manhole Riser Ring Detail for Standard Manhole Frame and Cover …..... H-10
- Manhole Top Detail..... H-11
- Standard Manhole Frame and Cover……..... H-12
- Typical Invert Shaping……..... H-13
- Plan View - Typical Short Side Tap detail for Sewer Mains Less Than 6' Deep……..... H-14
- Profile View - Typical Short Side Tap Detail with Service Connection for Sanitary Sewer Mains Less Than 6'……..... H-15
- Plan View - Typical Long Side Tap Detail for Sanitary Sewer Mains Less Than 6' Deep…….....H-16
- Typical Service Tap Connection Only on HDPE Pipe…….....H-17
- Typical Service Tap Connection for PVC Pipe……..... H-18
- Standard Typical Service Tap Connection for Concrete or Clay Pipe…..... H-19
- Typical Service Tap Connection for Concrete or Clay Pipe with Saddle (To be used only when approved by Water Utilities Engineer).....H-20
- Plan View - Typical Short Side Tap Detail for Sanitary Sewer Mains Deeper Than 6'..... H-21
- Profile View - Typical Short Side Tap Detail for Sanitary Sewer Mains Deeper Than 6'.....H-22
- Typical Long and Short Side Sanitary Sewer Service Connection and Street Crossing Details..... H-23
- Sanitary Sewer Service Line Detail for Sanitary Sewer Mains Over 6' Deep.....H-24
- Sanitary Sewer Clean Out and Service Connection Detail H-25
- Installation of a Clean Out on an Existing Sanitary Sewer Service Connection..... H-26
- Typical Sanitary Sewer Service Line Replacement on Slip Lined Sanitary Sewer Main.....H-27

Description **Page #**

- Typical Mandrel Detail.....H-28
- Typical Long and Short Side Water and Sanitary Sewer Service Connection.....H-29
- Typical Water and Sanitary Sewer Main Crossing.....H-30
- Typical Fire Service Line Connection for Existing and New Water Mains H-31
- Typical Fire Hydrant Installation.....H-32
- Typical Water Meter Installation New Subdivision..... H-33
- Typical Meter Installation of 1 ½" to 2" Meter using a Poly Meter Box ……... H-35
- Typical Water Service Connection..... H-36
- Typical Long and Short Side Water Service Connection and Street Crossing Details..... H-37
- Dead End Flush Out Detail..... H-38
- Typical Meter Bank Installation for 1" Meters ……..... H-40
- Typical Meter Bank Installation for 1 ½" and 2" Meters.....H-41
- Typical Fittings and Concrete Thrust Block Installation..... H-42
- Typical Fittings and Concrete Thrust Block Installation..... H-43
- Typical Casing Detail..... H-44
- Main Line Repair Detail.....H-45
- Typical Utility Crossing.....H-46
- Typical Road and Trench Backfilling.....H-47
- Typical Insertion Pit Closure Full Circle Clamp Repair…… H-48
- Manhole Rehabilitation Typical Manhole in Concrete / Asphalt Pavement…...H-49
- Manhole Rehabilitation Typical Brick Manhole……..H-50
- Manhole Rehabilitation Typical Combination Manhole (Brick / Fiberglass) …….. H-51
- Manhole Rehabilitation Typical Combination Manhole (Concrete / Fiberglass) ……... H-52
- Manhole Rehabilitation Typical Fiberglass Manhole……...H-53
- Manhole Rehabilitation Typical Precast Concrete Manhole……H-54
- Manhole Rehabilitation Service Lateral Seal……H-55
- Manhole Rehabilitation Annular Seal……..H-56
- Above Ground Fiberglass Manhole……H-57
- New Manhole on Existing Concrete or Vitrified Clay Pipe……H-59
- Valve Box Protection Detail …… H-61
- End-of-Line Cleanout on New or Rehabilitated Sewer Main……H-62
- Typical HDPE Water Service Connection ……..….. H-63

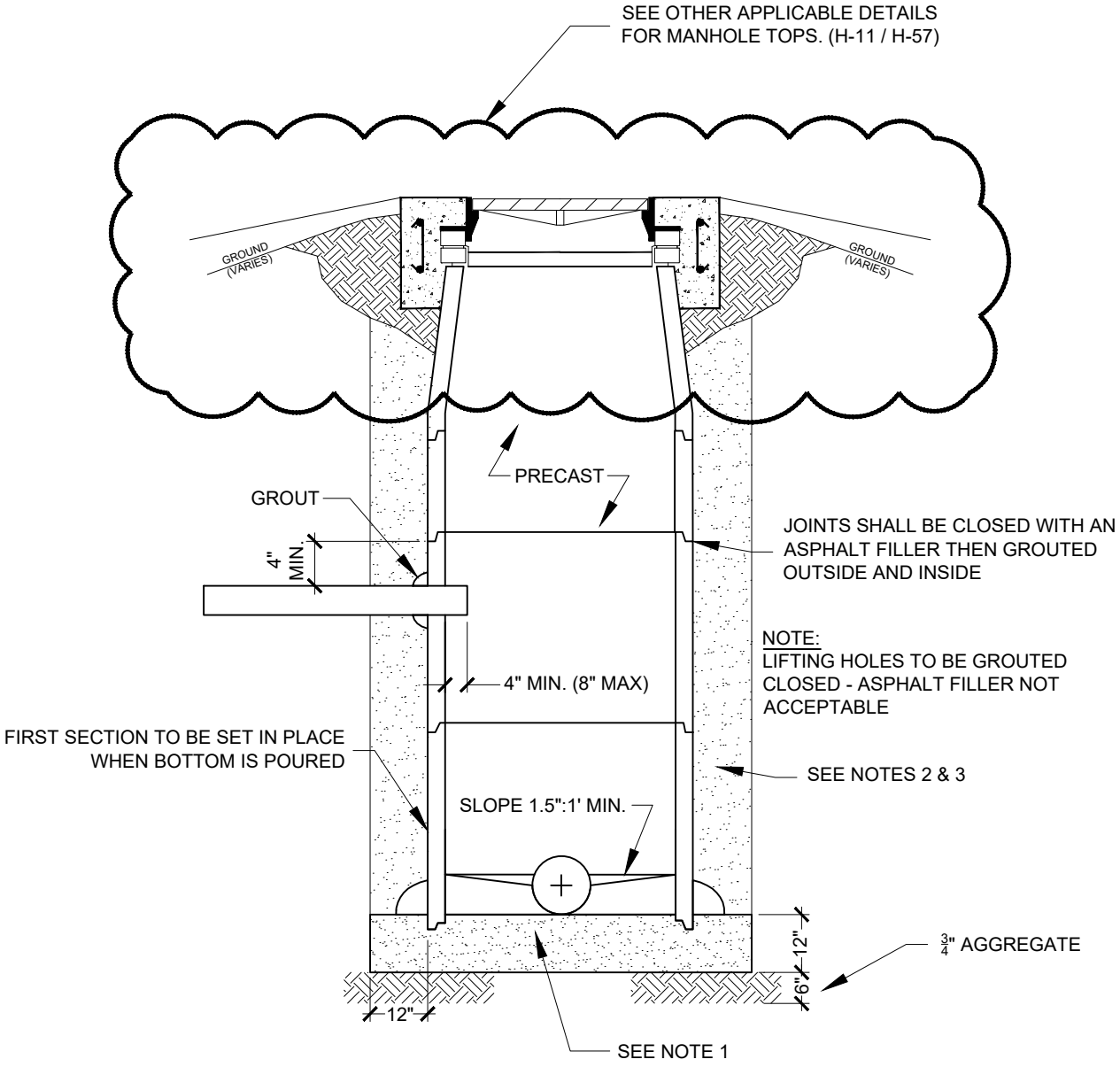

NOTE:

1. HANSON PIPE PRECAST BASE OR APPROVED EQUAL.
2. IF MANHOLE IS INSTALLED WITHIN 5' OF THE ROADWAY THEN STABILIZED SAND NEEDS TO BE USED FOR BACKFILLING.
3. IF MANHOLE IS INSTALLED BEYOND 5' THEN SELECT BACKFILL CAN BE USED.

TYPICAL PRECAST MANHOLE DETAIL

CITY OF BEAUMONT
WATER UTILITIES DEPARTMENT
N.T.S.

REVISED: 08/11/2021

H-1

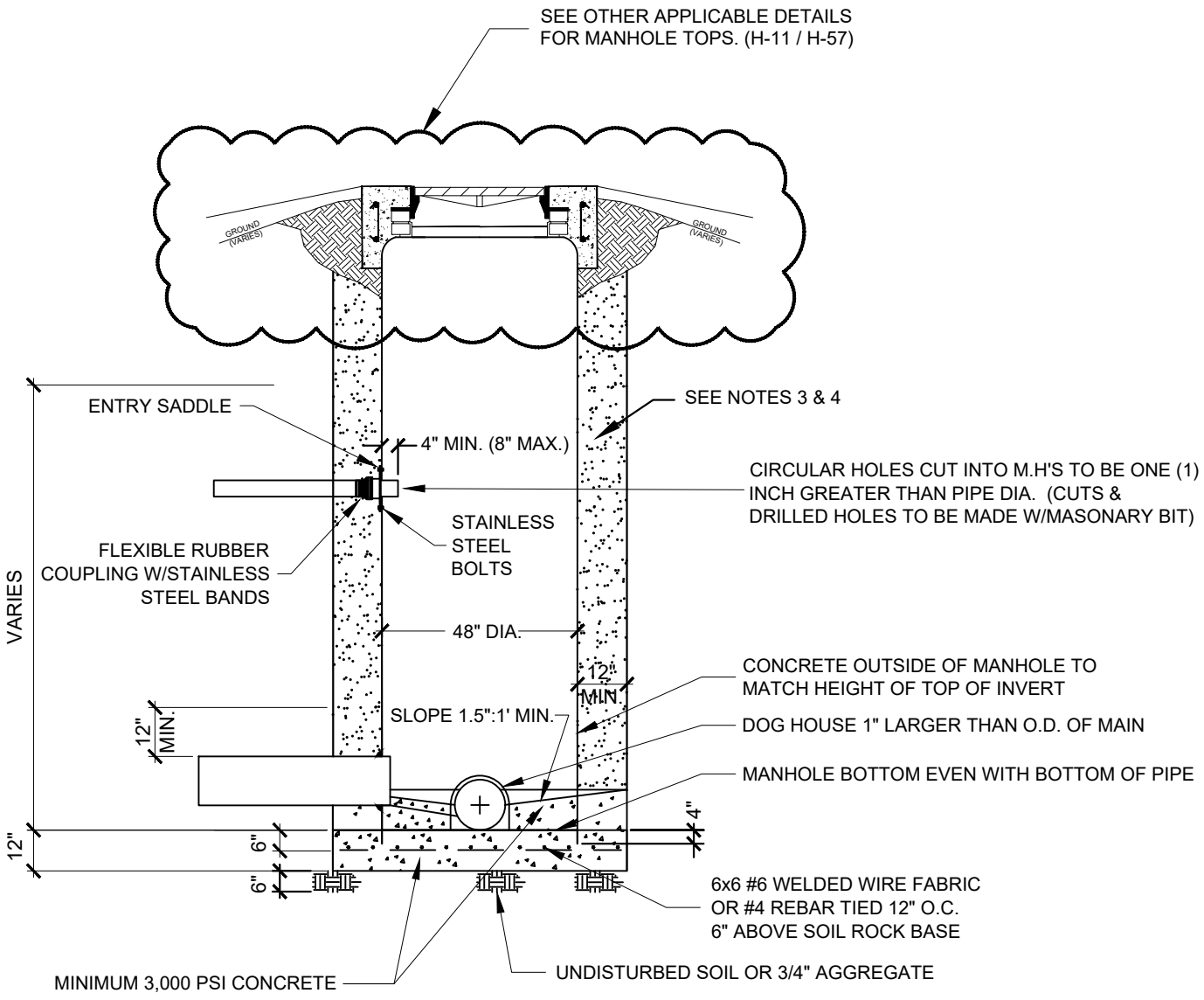

NOTE:

1. INSTALLATION SHALL COMPLY WITH MANUFACTURER'S RECOMMENDED INSTALLATION INSTRUCTIONS.
2. IF MANHOLE IS PLACED IN THE DITCH OR ROADWAY, SEE H-1 (PRECAST MANHOLE DETAIL)
3. IF MANHOLE IS INSTALLED WITHIN 5' OF THE ROADWAY THEN STABILIZED SAND NEEDS TO BE USED FOR BACKFILLING.
4. IF MANHOLE IS INSTALLED BEYOND 5' THEN SELECT BACKFILL CAN BE USED.

TYPICAL FIBERGLASS MANHOLE

FOR SEWER MAINS LESS THAN 48"

CITY OF BEAUMONT
WATER UTILITIES DEPARTMENT
N.T.S.

REVISED: 08/11/2021

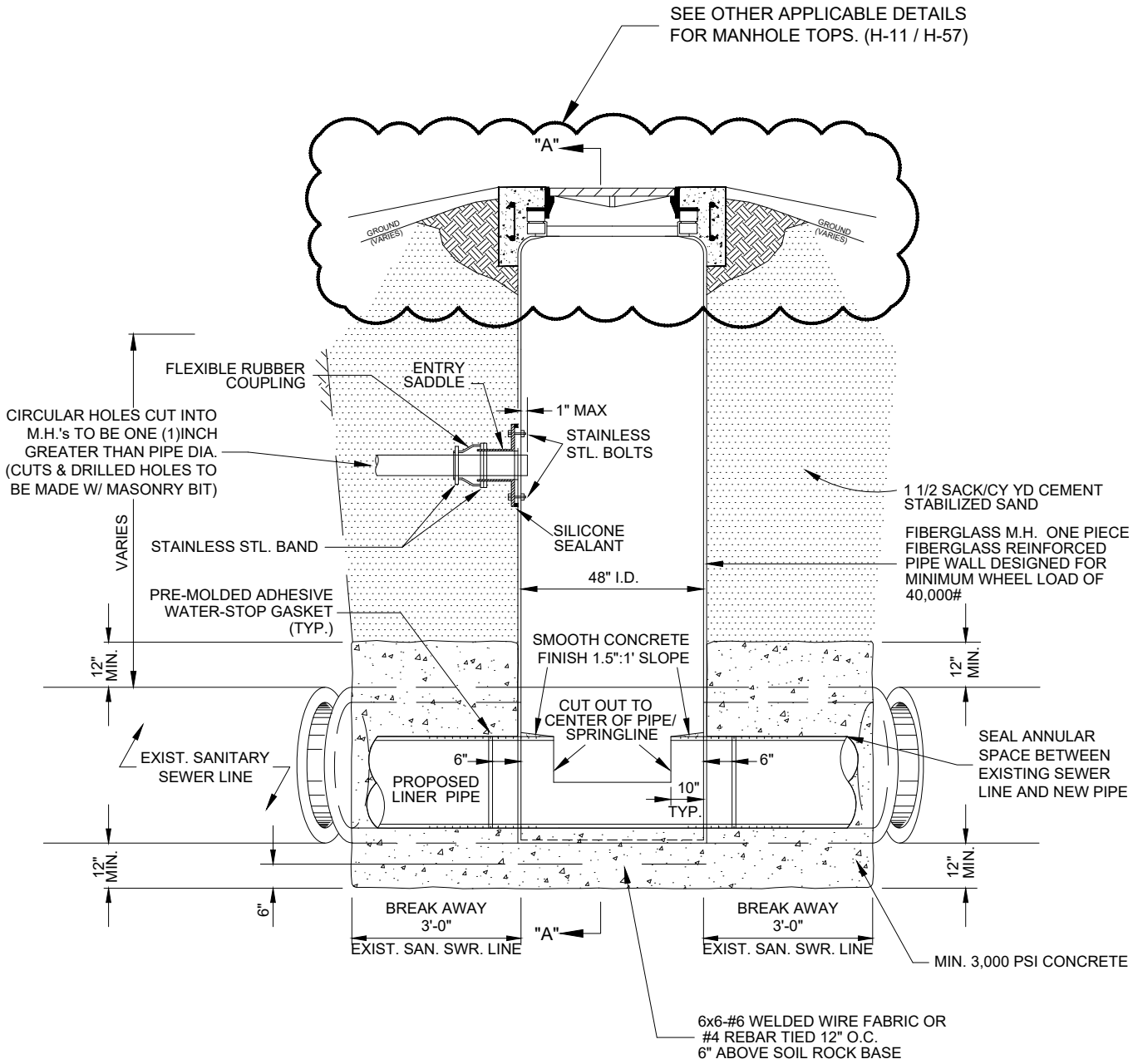

TYPICAL CONNECTION TO NEW MANHOLE FOR SLIP-LINE SEWER MAINS

CITY OF BEAUMONT
WATER UTILITIES DEPARTMENT
N.T.S.

REVISED: 08/11/2021

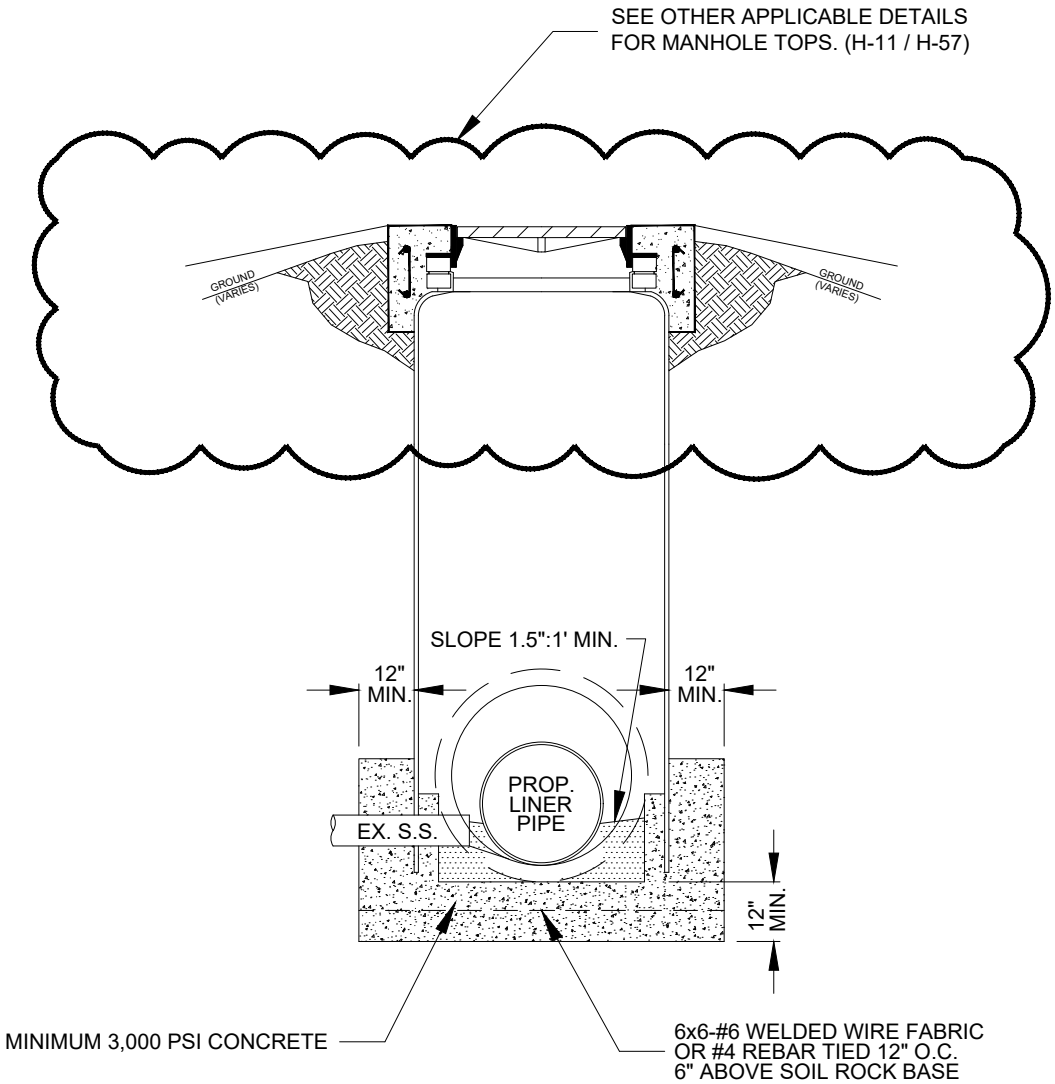

NOTE:
INVERT SHOULD BE SHAPED TO FORM A SMOOTH TRANSITION FROM MANHOLE WALLS TO INVERT OF EFFLUENT PIPE. ALL CORNERS SHALL BE FILLED WITH GROUT AND SHAPED SO AS TO CHANNEL FLOW TO INVERT OF EFFLUENT PIPE WITH NO OBSTRUCTIONS.

SECTION "A-A" OF TYPICAL LINER CONNECTION TO NEW MANHOLE

CITY OF BEAUMONT
WATER UTILITIES DEPARTMENT
N.T.S.

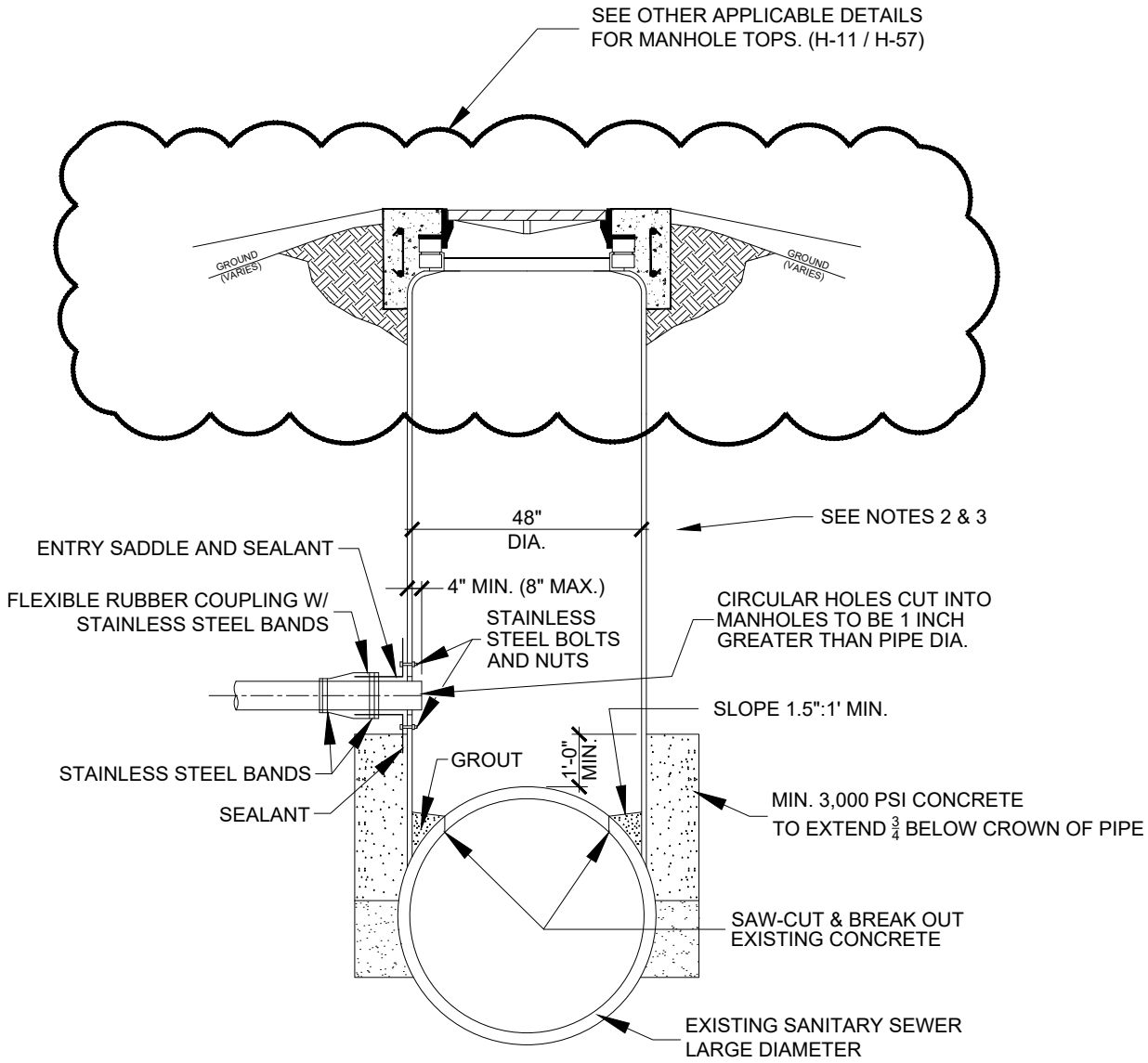

NOTE:
1. INSTALLATION SHALL COMPLY WITH MANUFACTURER'S RECOMMENDED INSTALLATION INSTRUCTIONS.
2. IF FIBERGLASS MANHOLE IS INSTALLED WITHIN 5' OF THE ROADWAY THEN STABILIZED SAND NEEDS TO BE USED.
3. IF FIBERGLASS MANHOLE IS INSTALLED BEYOND 5' THEN SELECT BACKFILL CAN BE USED.
4. IF MANHOLE IS PLACED IN THE DITCH, SEE H-1 (PRECAST MANHOLE DETAIL)

MANHOLE OVER EXISTING LARGE LINE (48" AND UP)

CITY OF BEAUMONT
WATER UTILITIES DEPARTMENT
N.T.S.

REVISED: 08/11/2021

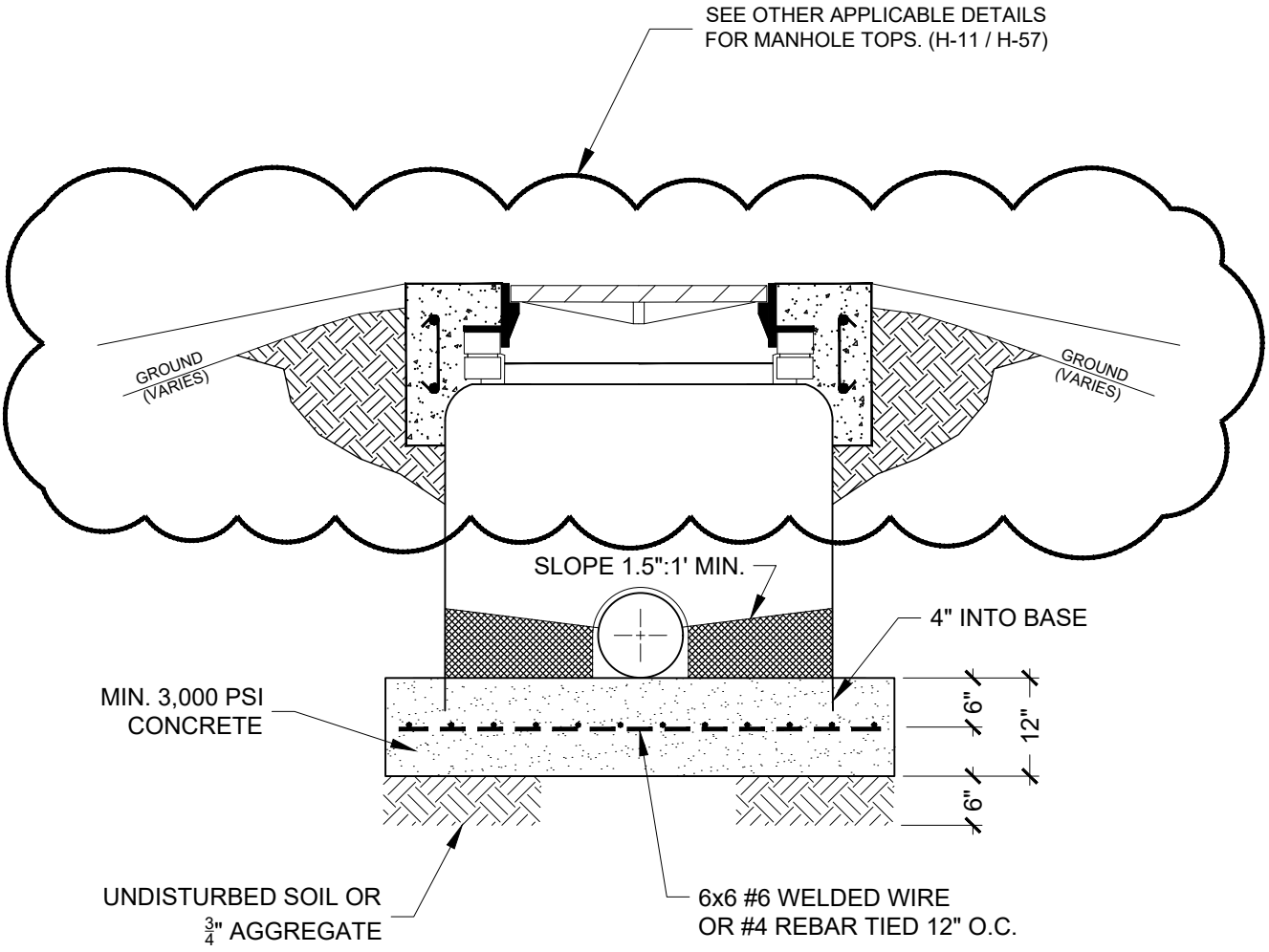

SHALLOW MANHOLE DETAIL

CITY OF BEAUMONT
WATER UTILITIES DEPARTMENT
N.T.S.

REVISED: 08/11/2021

H-8

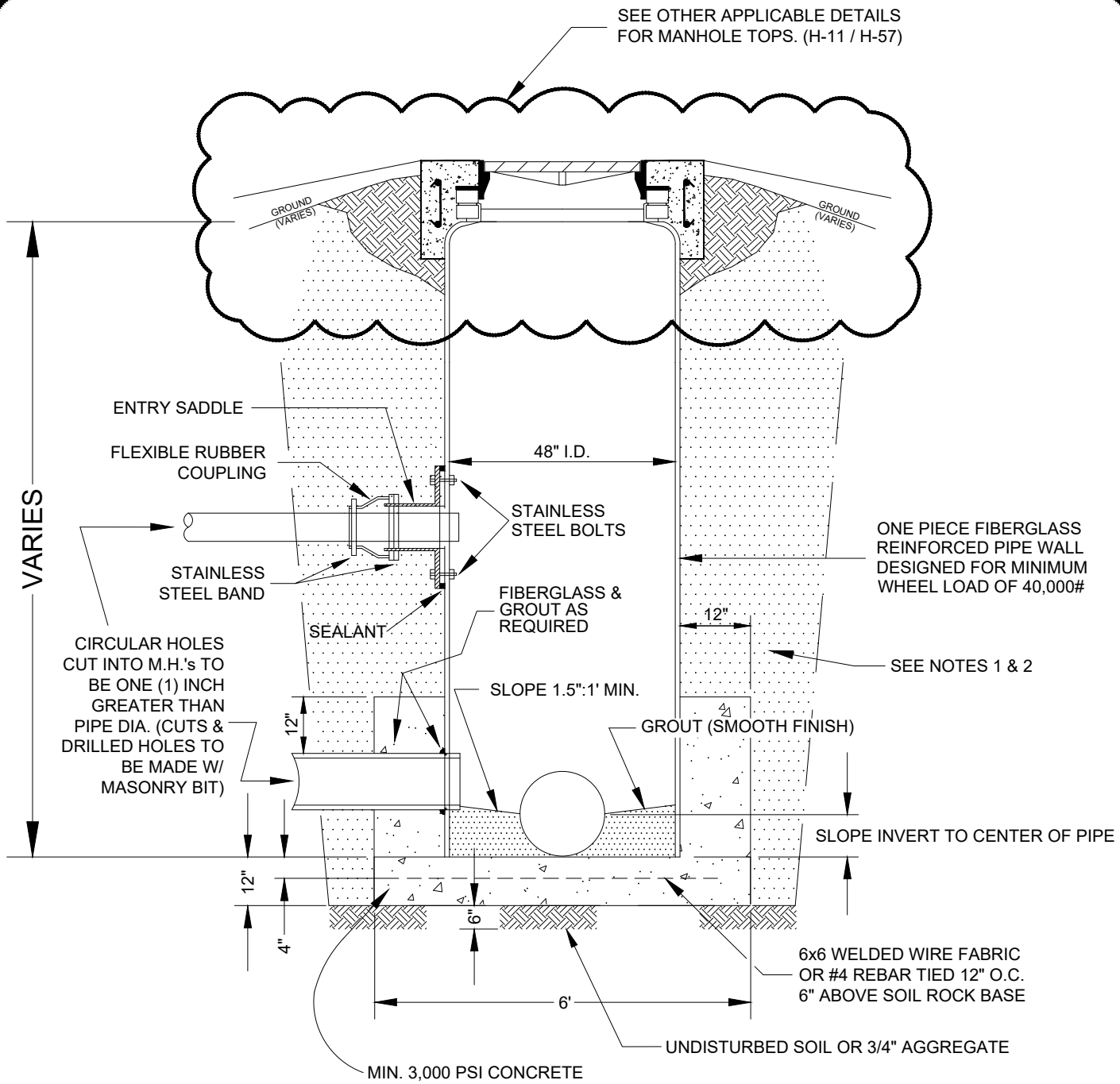

NOTES:

D3753-79 (STANDARD SPECIFICATION FOR GLASS FIBER-REINFORCED POLYESTER MANHOLES). ALL MANHOLES SUPPLIED WITH CONES SHALL BE CERTIFIED TO COMPLY WITH ANSI/ASTM. INSTALLATION SHALL COMPLY WITH MANUFACTURER'S RECOMMENDED INSTALLATION INSTRUCTIONS. FOR CONCRETE OR BRICK MANHOLES 12" OF CONCRETE SHALL BE PLACED AROUND THE PIPE ON THE OUTSIDE OF THE MANHOLE.

REFER TO SPECIFICATION SECTION 3301 FOR FIBERGLASS MANHOLE STIFFNESS - THICKNESS.

NOTE:

1. IF MANHOLE IS INSTALLED WITHIN 5' OF THE ROADWAY THEN STABILIZED SAND NEEDS TO BE USED FOR BACKFILLING.
2. IF MANHOLE IS INSTALLED BEYOND 5' THEN SELECT BACKFILL CAN BE USED.

TYPICAL MANHOLE FOR PIPEBURSTING

CITY OF BEAUMONT
WATER UTILITIES DEPARTMENT
N.T.S.

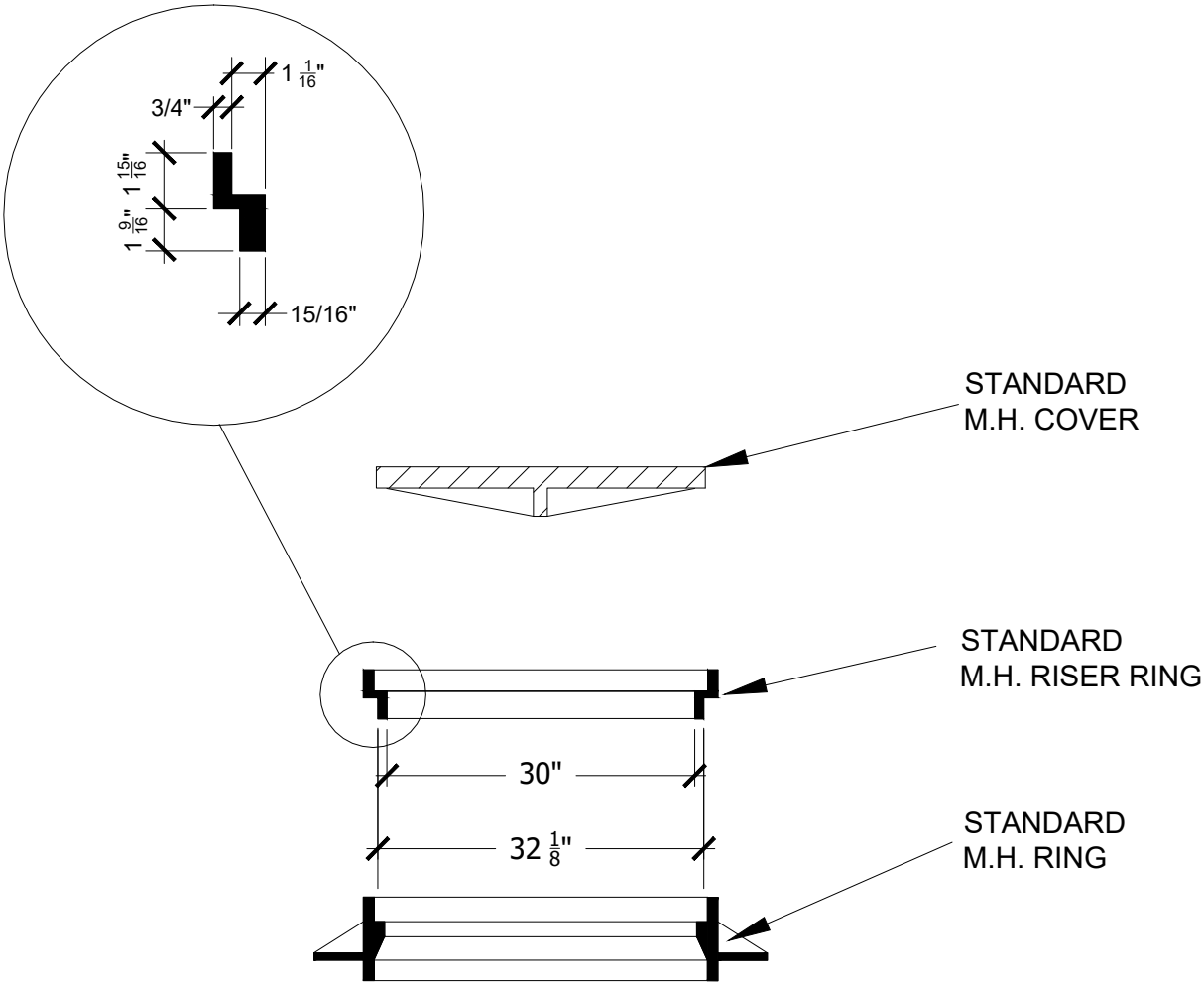

MANHOLE RISER RING DETAIL FOR STANDARD MANHOLE FRAME AND COVER

CITY OF BEAUMONT
WATER UTILITIES DEPARTMENT
N.T.S.

REVISED: 8/11/2021

H-10

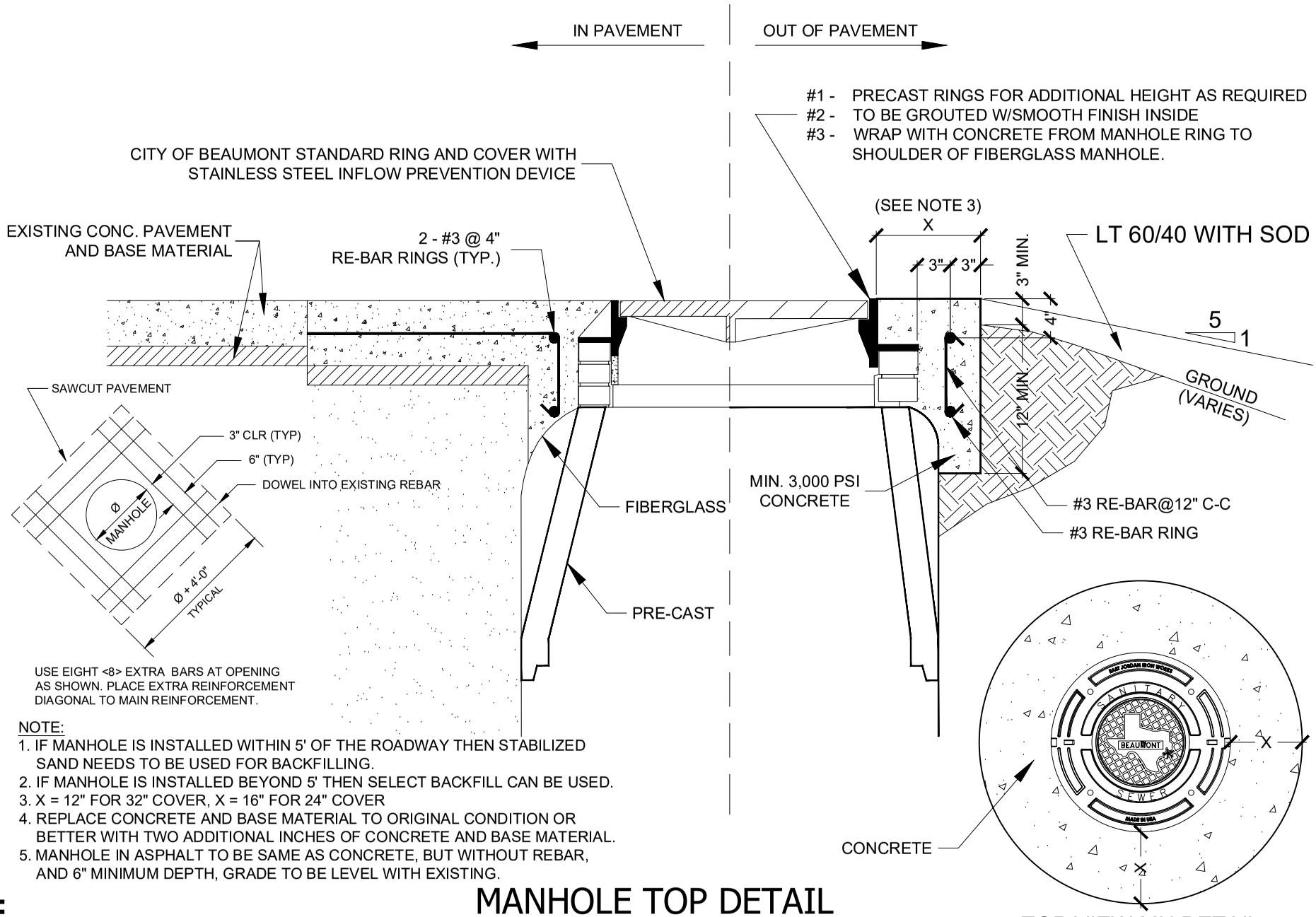

NOTE:

1. IF MANHOLE IS INSTALLED WITHIN 5' OF THE ROADWAY THEN STABILIZED SAND NEEDS TO BE USED FOR BACKFILLING.
2. IF MANHOLE IS INSTALLED BEYOND 5' THEN SELECT BACKFILL CAN BE USED.
3. X = 12" FOR 32" COVER, X = 16" FOR 24" COVER
4. REPLACE CONCRETE AND BASE MATERIAL TO ORIGINAL CONDITION OR BETTER WITH TWO ADDITIONAL INCHES OF CONCRETE AND BASE MATERIAL.
5. MANHOLE IN ASPHALT TO BE SAME AS CONCRETE, BUT WITHOUT REBAR, AND 6" MINIMUM DEPTH, GRADE TO BE LEVEL WITH EXISTING.

MANHOLE TOP DETAIL

TOP VIEW MH DETAIL

CITY OF BEAUMONT
WATER UTILITIES DEPARTMENT
N.T.S.

REVISED: 10/23/2019

H-11

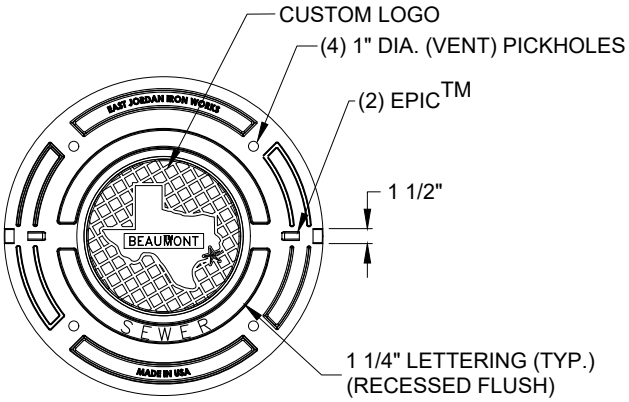

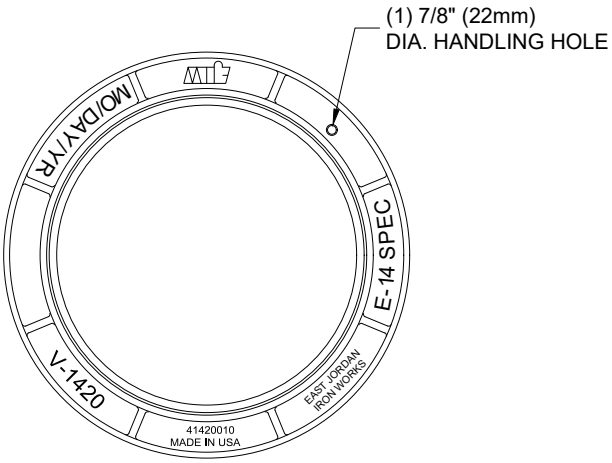

FRAME TOP VIEW

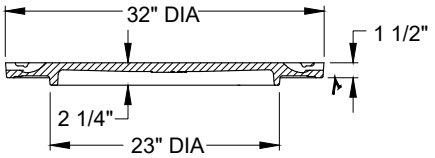

COVER SECTION

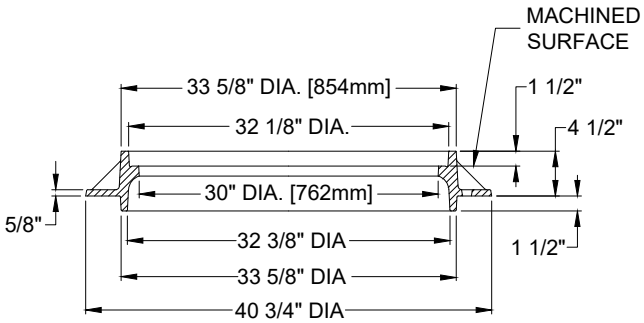

FRAME SECTION

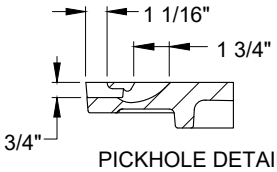

PICKHOLE DETAIL

SPECIFICATIONS:

1. MATERIAL: RING: CAST IRON A. S. T. M. A-48, CLASS NO. 35, COVER: DUCTILE IRON, ASTM A536, AASHTO M306

2. ALL CASTINGS SHALL BE FIRST QUALITY, SMOOTH CASTINGS, FREE FROM FLAWS, BLOW HOLES, SAND HOLES OR OTHER IMPERFECTIONS.

3. THE BEARING SURFACES OF ALL FRAMES AND COVERS BOTH SHALL BE MACHINED FINISHED FOR FULL PERIPHERY EVEN BEARINGS.

4. ALL CASTINGS MUST BE SAND BLASTED CLEAN OF SCALE OR SAND SO AS TO PRESENT A SMOOTH, CLEAN AND UNIFORM SURFACE.

5. THE WEIGHT OF THE MANHOLE RING SHOULD NOT EXCEED 235 LBS.

6. THE WEIGHT OF THE MANHOLE COVER SHOULD NOT EXCEED 175 LBS.

STANDARD MANHOLE FRAME AND COVER

CITY OF BEAUMONT
WATER UTILITIES DEPARTMENT
N.T.S.

REVISED: 08/11/2021

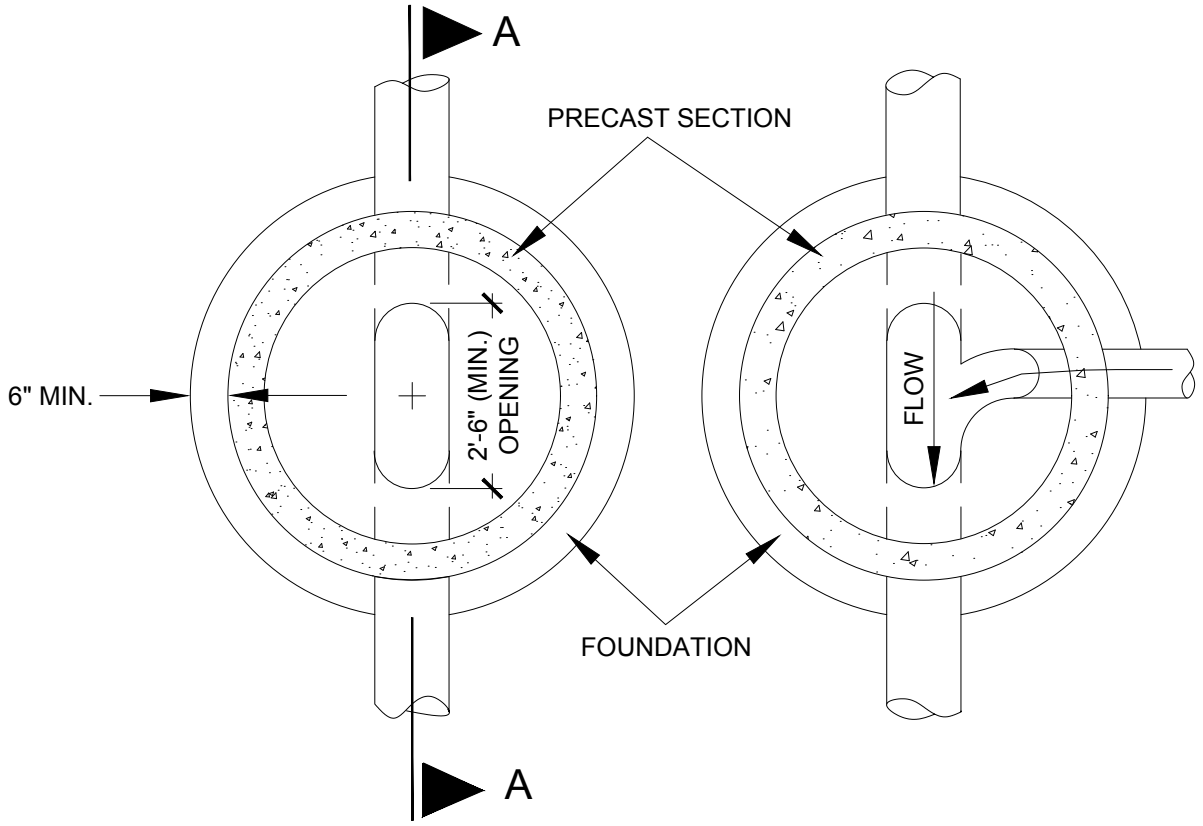

PLAN VIEW

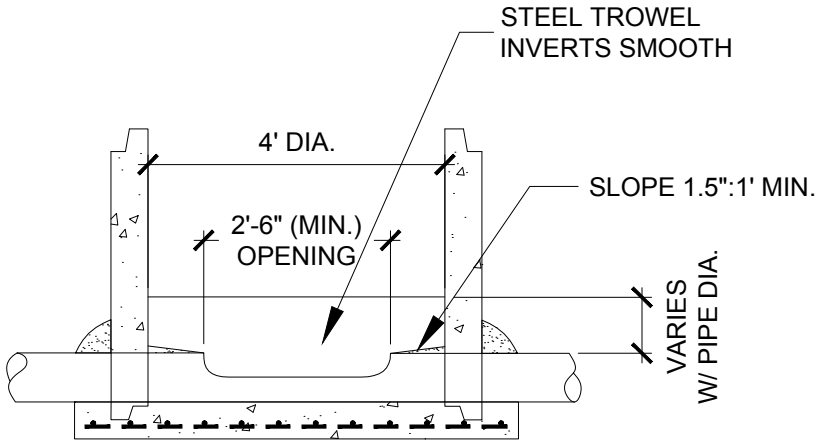

SECTION A-A

TYPICAL INVERT SHAPING

CITY OF BEAUMONT
WATER UTILITIES DEPARTMENT
N.T.S.

REVISED: 04/14/2020

H-13

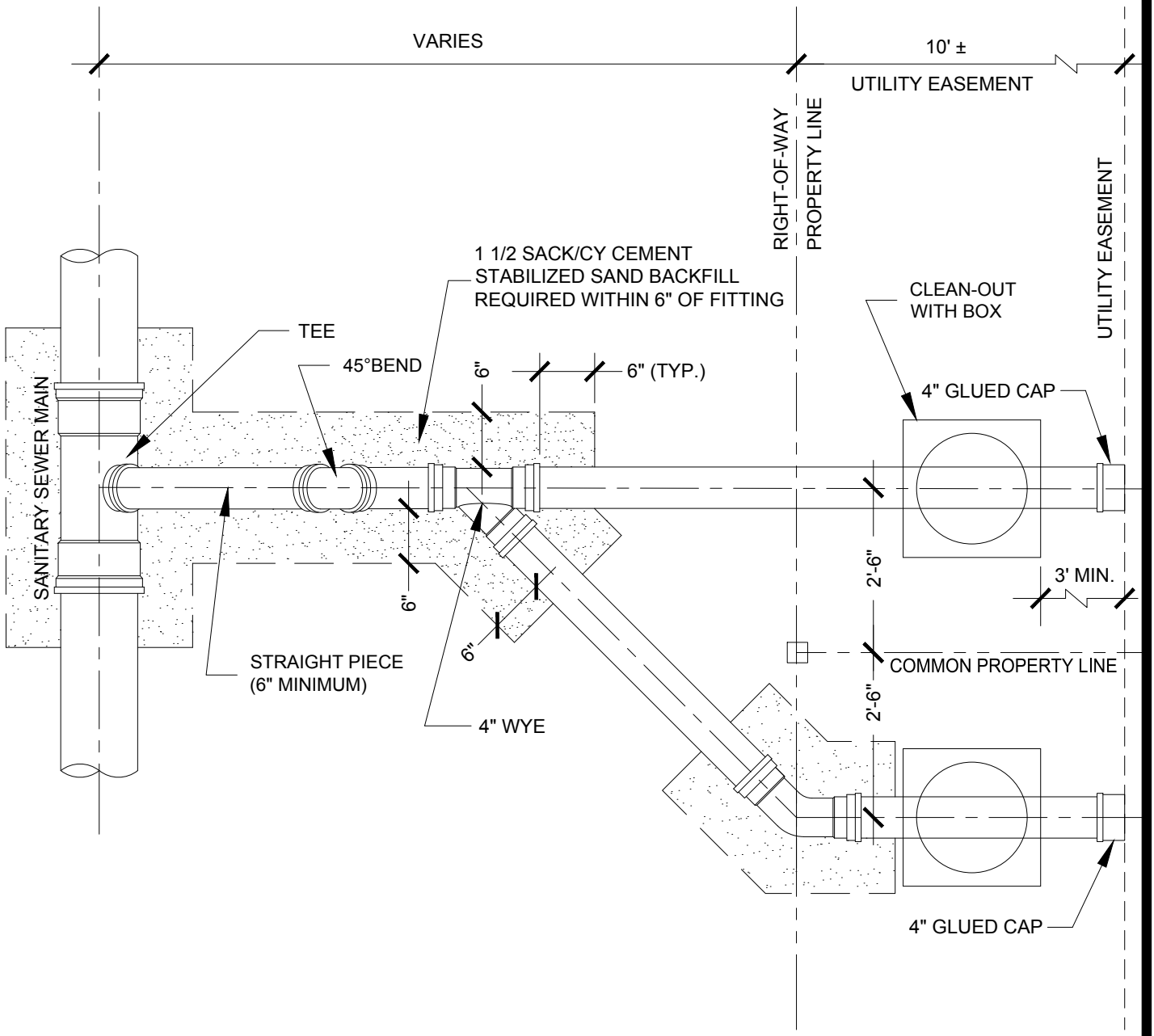

PLAN VIEW
TYPICAL SHORT SIDE TAP DETAIL
FOR SEWER MAINS LESS THAN 6' DEEP

CITY OF BEAUMONT
WATER UTILITIES DEPARTMENT
N.T.S.

REVISED: 04/14/2020

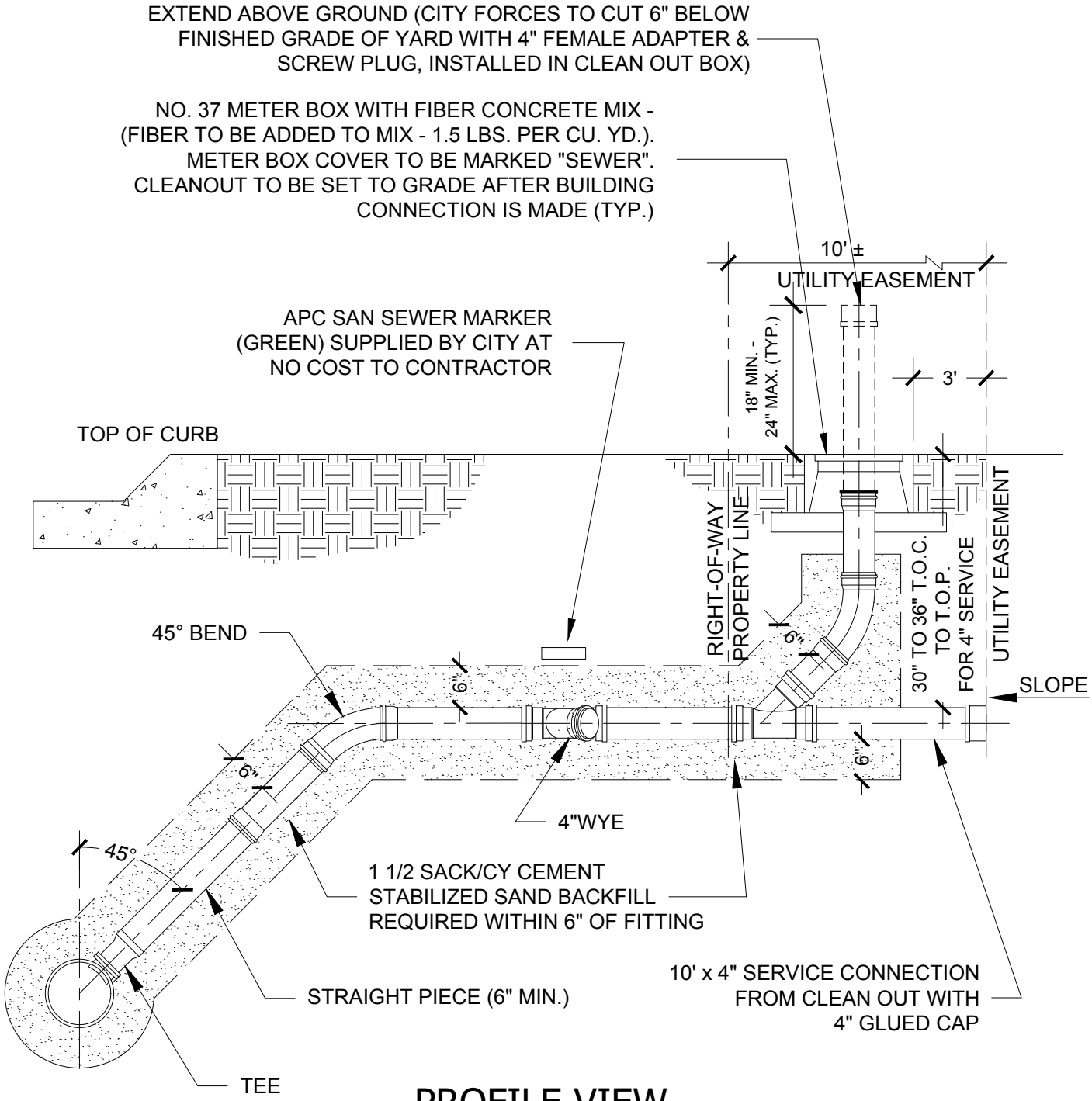

PROFILE VIEW
TYPICAL SHORT SIDE TAP DETAIL WITH SERVICE CONNECTION FOR SEWER MAINS LESS THAN 6' DEEP

CITY OF BEAUMONT
WATER UTILITIES DEPARTMENT
N.T.S.

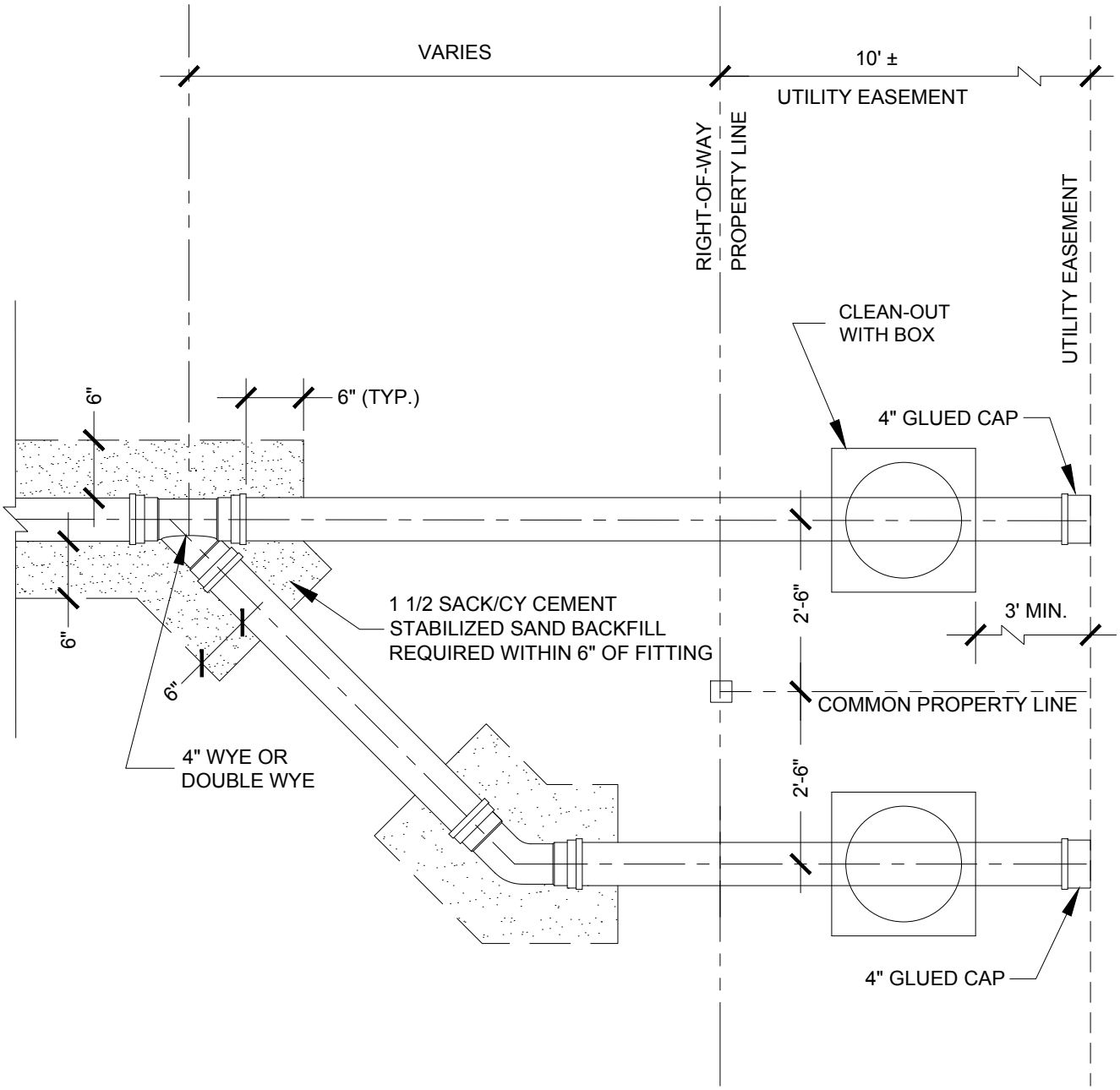

PLAN VIEW
TYPICAL LONG SIDE TAP DETAIL
FOR SEWER MAINS LESS THAN 6' DEEP

CITY OF BEAUMONT
WATER UTILITIES DEPARTMENT
N.T.S.

REVISED: 04/14/2020

H-16

NOTE:

* TO BE DRILLED WITH HOLE SAW AND GUIDE BIT. USE CORRECT DIAMETER FOR SADDLE LIP.

SEE SPECIFICATION SECTION 2534.

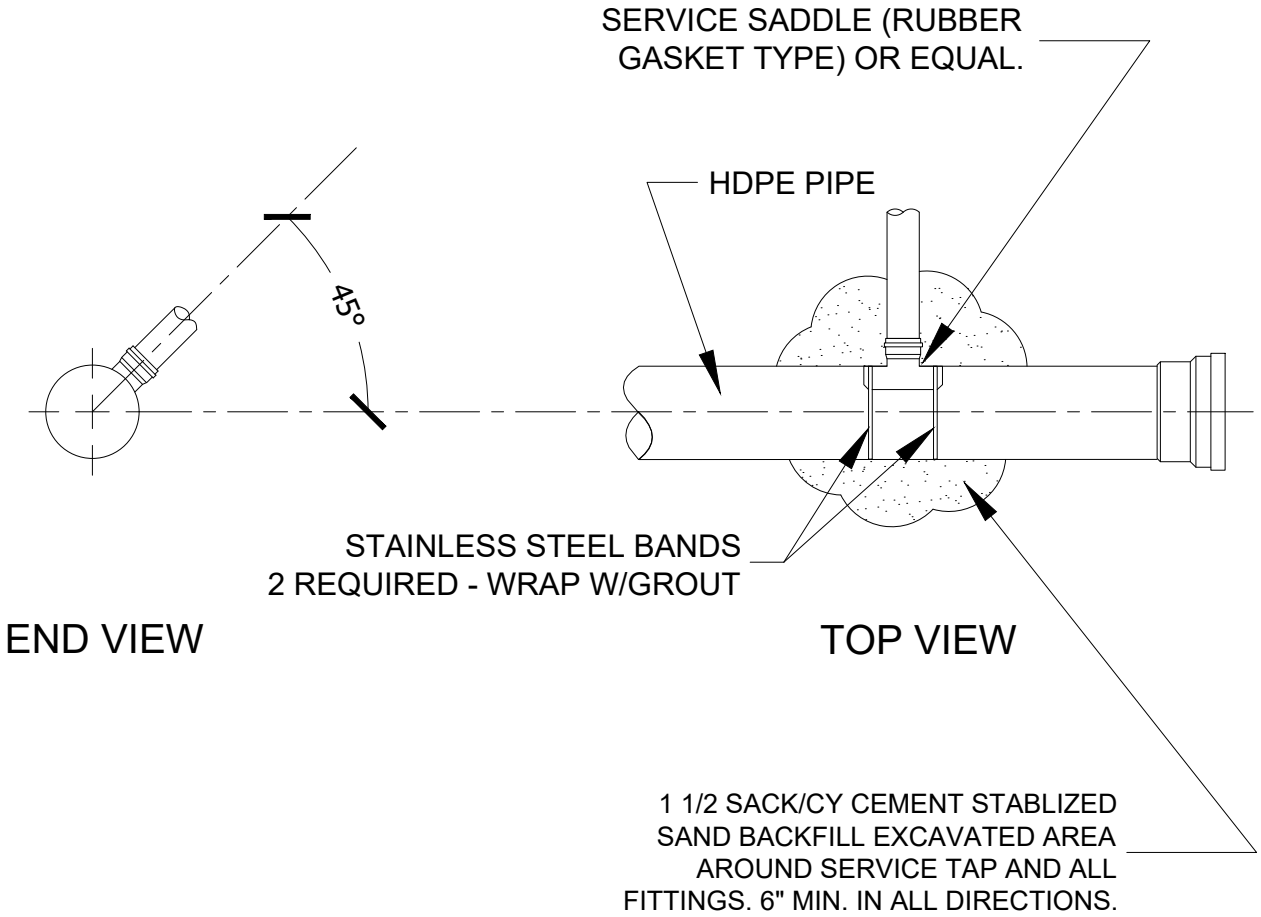

TYPICAL SERVICE TAP CONNECTION ONLY ON HDPE PIPE

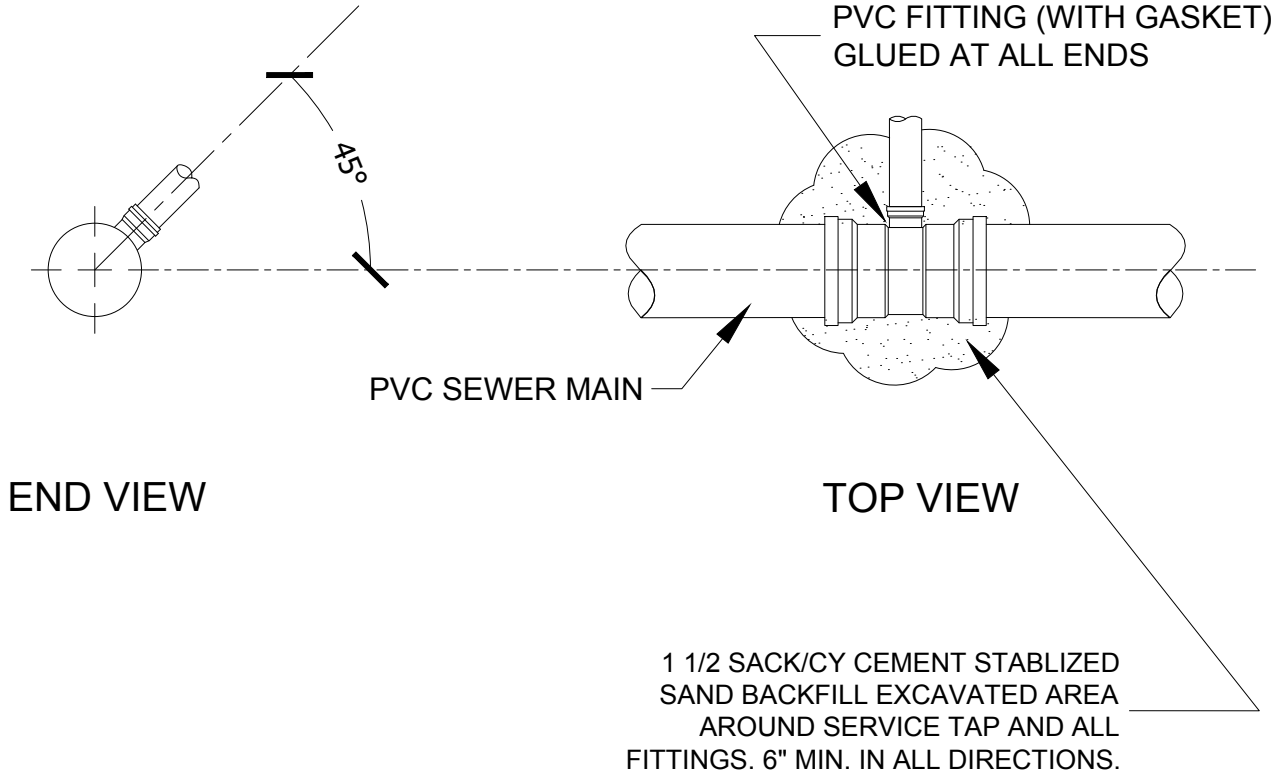

TYPICAL SERVICE TAP CONNECTION FOR PVC PIPE

CITY OF BEAUMONT
WATER UTILITIES DEPARTMENT
N.T.S.

REVISED: 04/14/2020

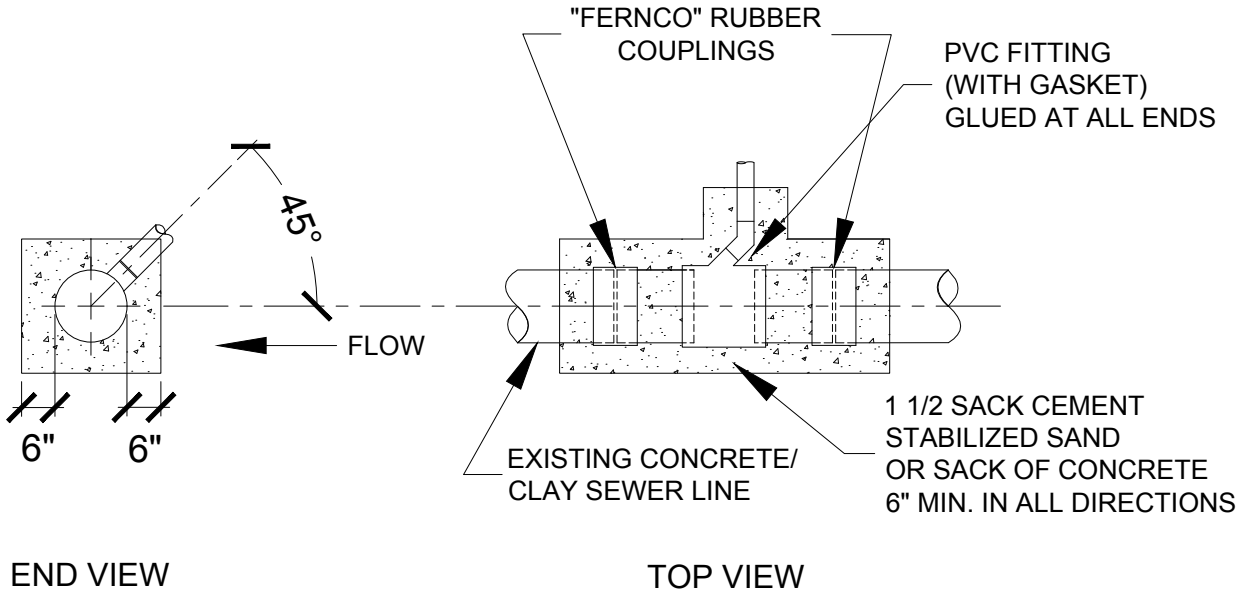

STANDARD TYPICAL SERVICE TAP CONNECTION FOR CONCRETE/CLAY PIPE

CITY OF BEAUMONT
WATER UTILITIES DEPARTMENT
N.T.S.

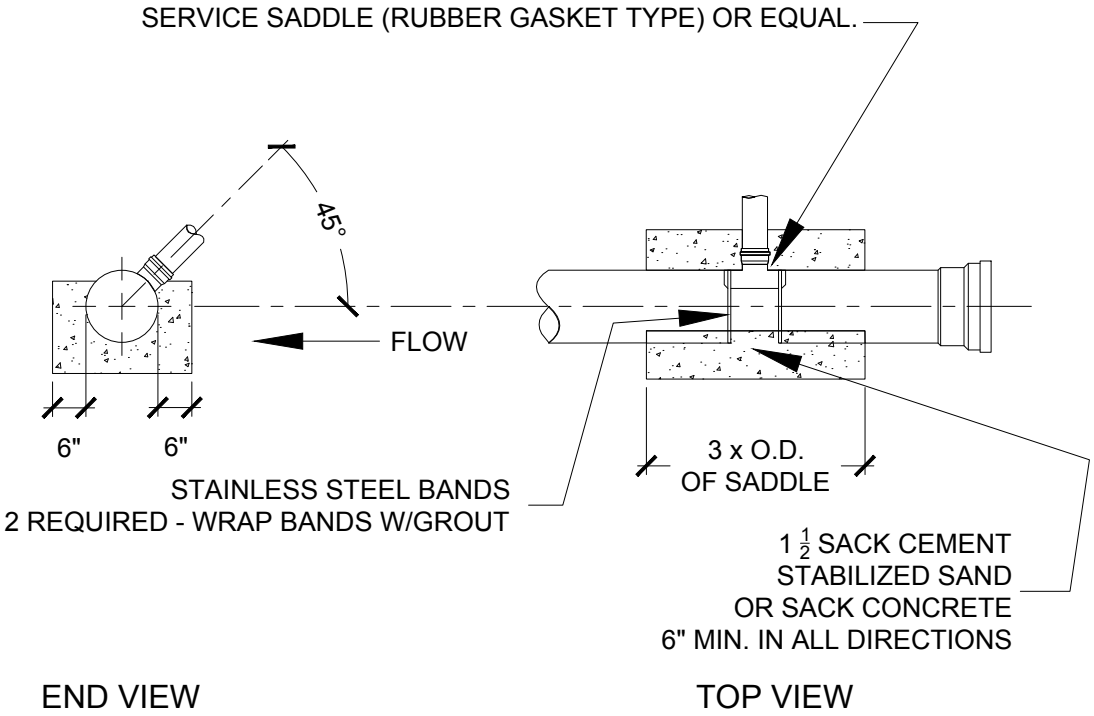

TYPICAL SERVICE TAP CONNECTION FOR CONCRETE/CLAY PIPE WITH SADDLE

(TO BE USED ONLY WHEN APPROVED BY WATER UTILITIES ENGINEER)

CITY OF BEAUMONT
WATER UTILITIES DEPARTMENT
N.T.S.

REVISED: 04/14/2020

H-20

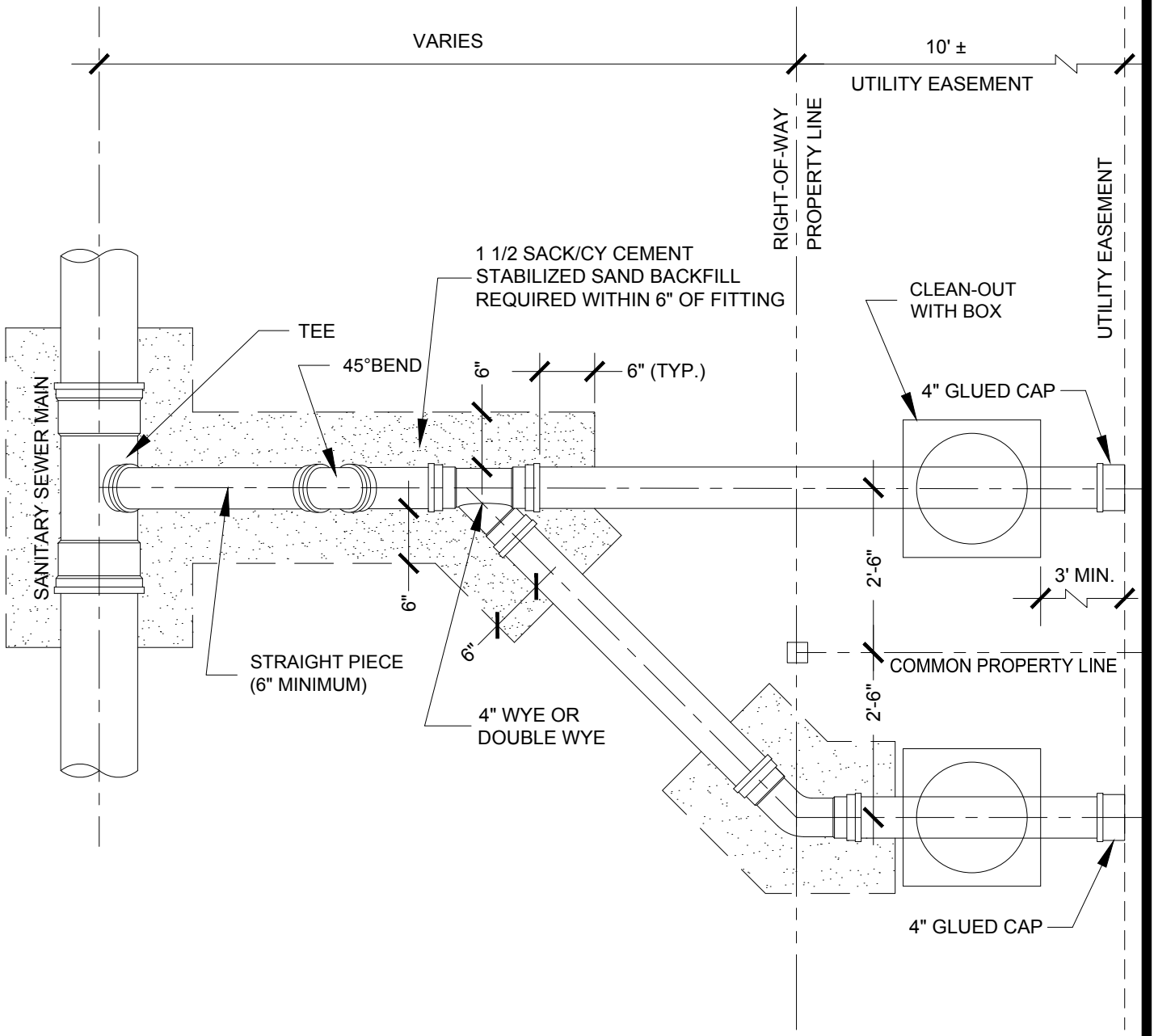

PLAN VIEW
TYPICAL SHORT SIDE TAP DETAIL
FOR SEWER MAINS DEEPER THAN 6'

CITY OF BEAUMONT
WATER UTILITIES DEPARTMENT
N.T.S.

REVISED: 04/14/2020

H-21

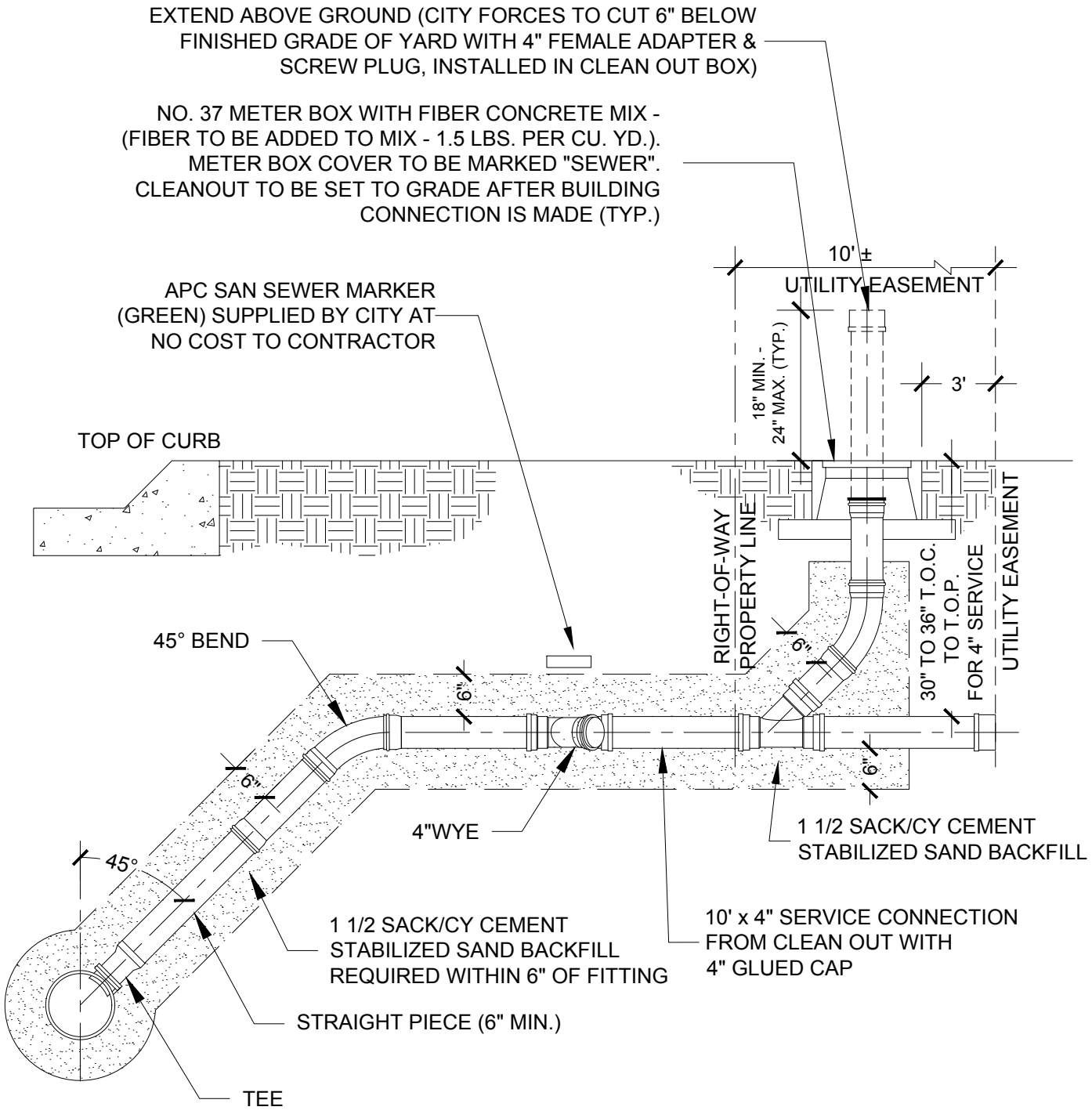

PROFILE VIEW
TYPICAL SHORT SIDE TAP DETAIL
FOR SEWER MAINS DEEPER THAN 6'

CITY OF BEAUMONT
WATER UTILITIES DEPARTMENT
N.T.S.

REVISED: 04/14/2020

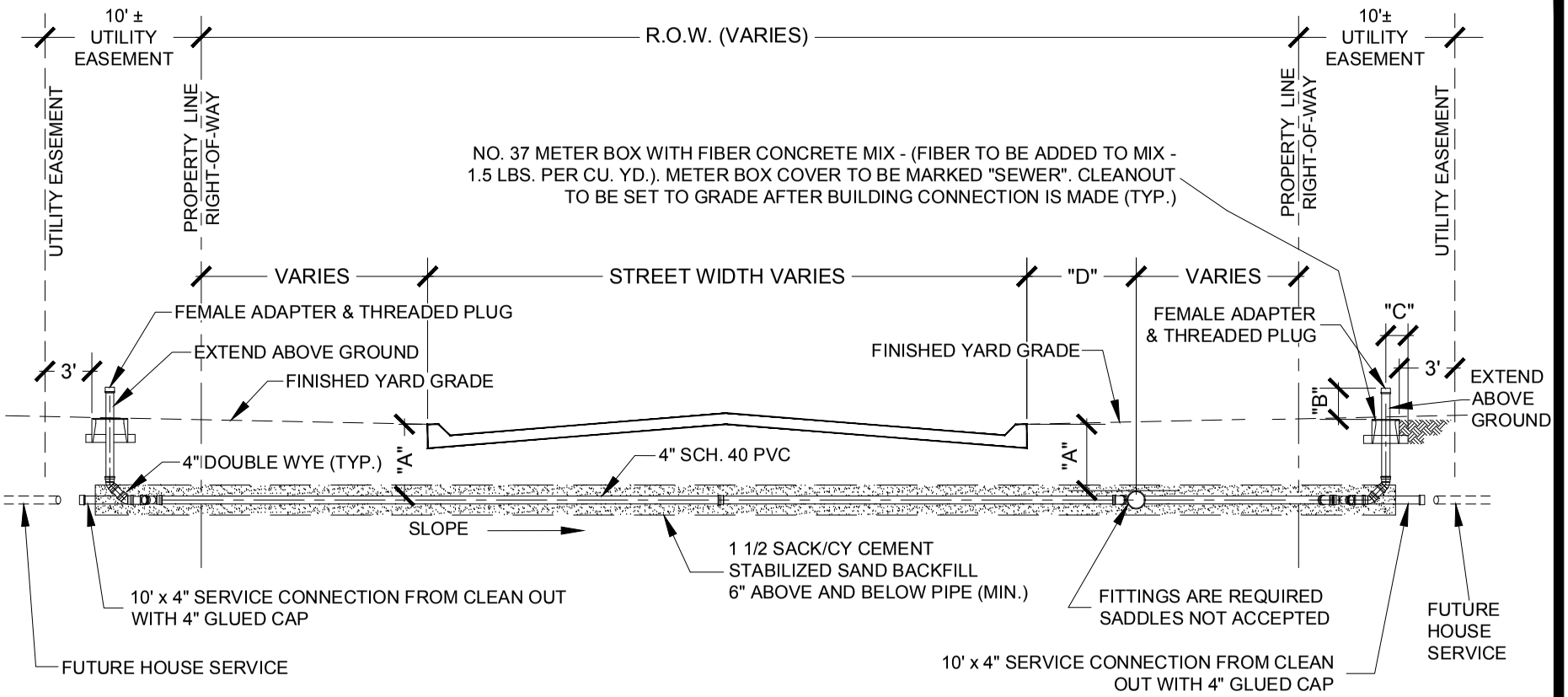

DIMENSIONS
"A" = 30" TO 36" TOP OF CURB TO TOP OF PIPE
"B" = 18" MINIMUM TO 24" MAXIMUM (TYP.)
"C" = 1'-6" (TYP.)
"D" = 7' TO BACK OF CURB

TYPICAL LONG AND SHORT SIDE SANITARY SEWER SERVICE CONNECTION AND STREET CROSSING DETAILS FOR NEW DEVELOPMENTS

CITY OF BEAUMONT
WATER UTILITIES DEPARTMENT
N.T.S.

REVISED: 02/14/2020

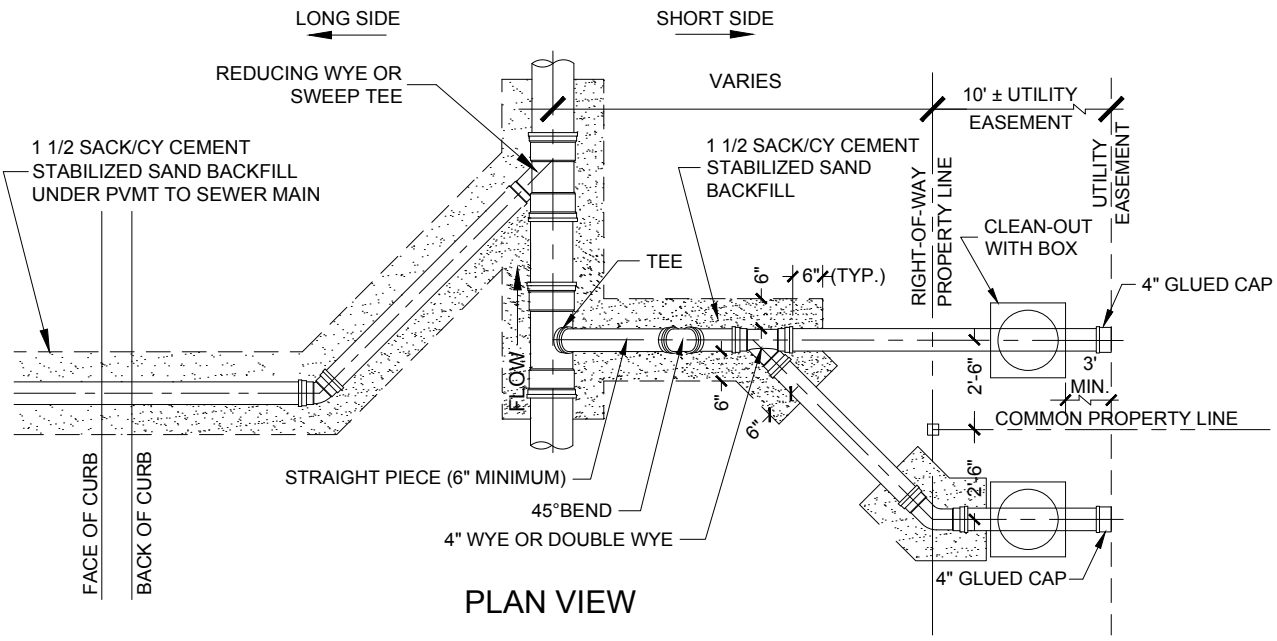

PLAN VIEW

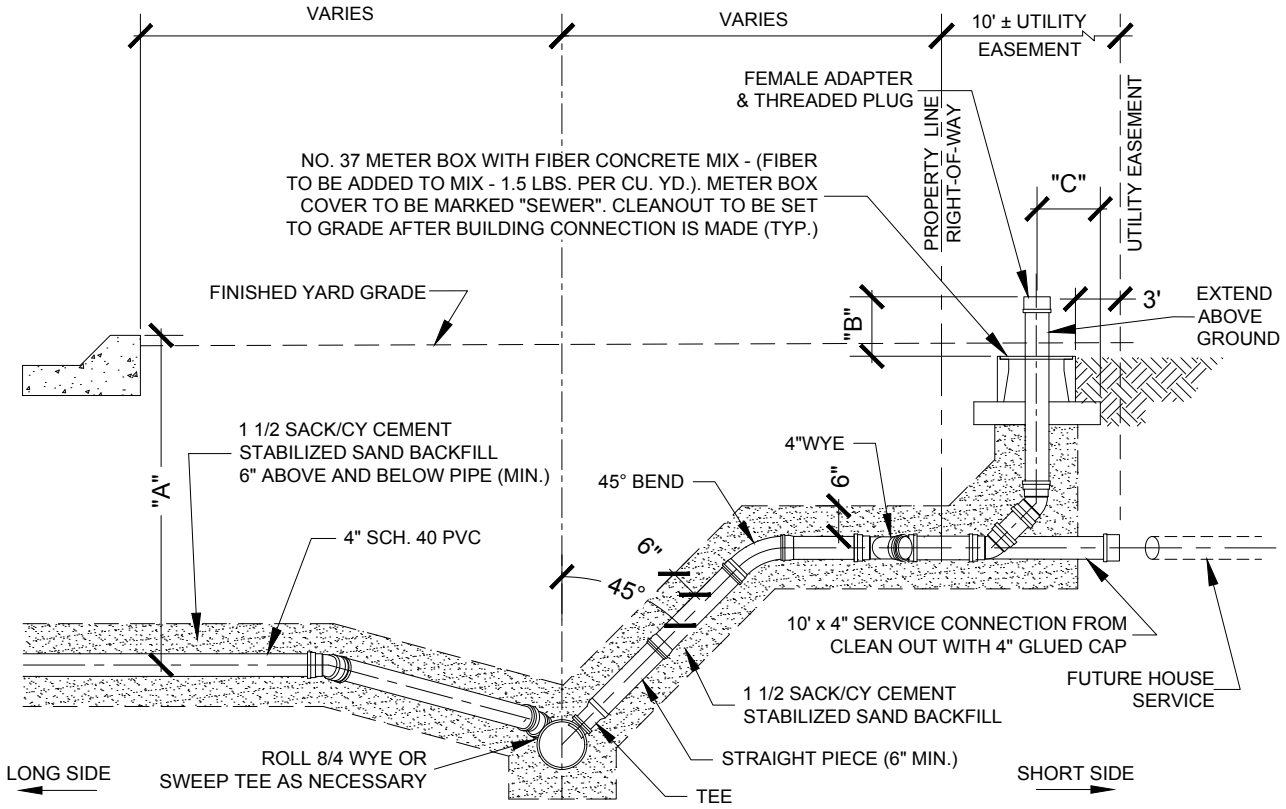

PROFILE VIEW

NOTE:

CLEAN OUT TO BE LOWERED TO 6" BELOW TOP OF CLEAN OUT BOX BY CITY FORCES AFTER BOTH SERVICE CONNECTIONS ARE IN SERVICE.

DIMENSIONS
"A" = 30" TO 36" TOP OF CURB TO TOP OF PIPE
"B" = 18" MINIMUM TO 24" MAXIMUM (TYP.)
"C" = 1'-6" (TYP.)

SANITARY SEWER SERVICE LINE
DETAIL FOR SEWER MAINS OVER 6' DEEP

CITY OF BEAUMONT
WATER UTILITIES DEPARTMENT
N.T.S.

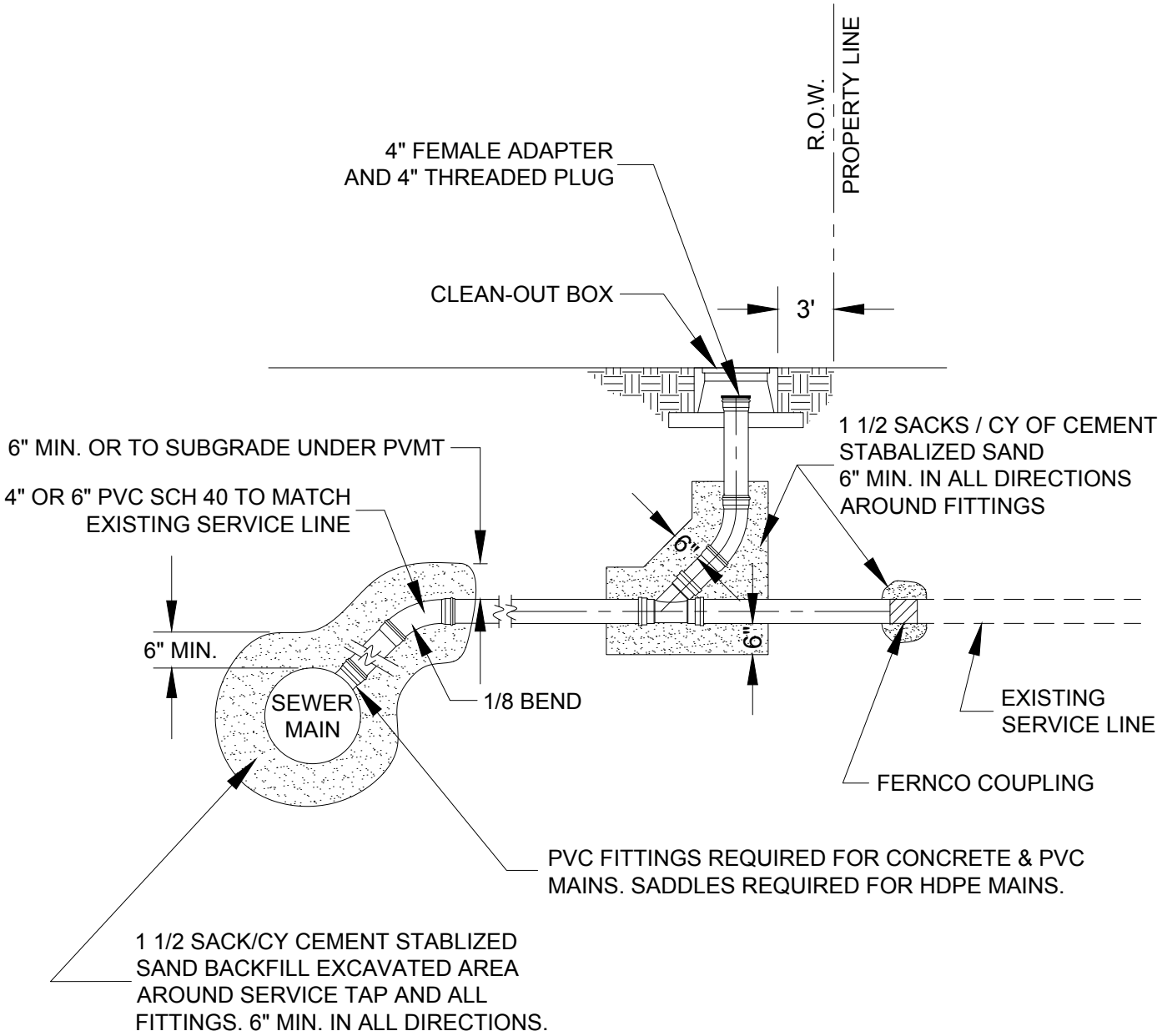

NOTE:

* CLEAN OUT TO BE ACCESSIBLE FROM PROPERTY IT SERVES

* NO. 37 METER BOX WITH FIBER CONCRETE MIX -(FIBER TO BE ADDED TO MIX - 1.5 LBS. PER CU. YD.). METER BOX COVER TO BE MARKED "SEWER". CLEAN-OUT TO BE SET TO GRADE AFTER BUILDING CONNECTION IS MADE. (TYP.)

SANITARY SEWER CLEANOUT AND SERVICE CONNECTION DETAIL

CITY OF BEAUMONT
WATER UTILITIES DEPARTMENT
N.T.S.

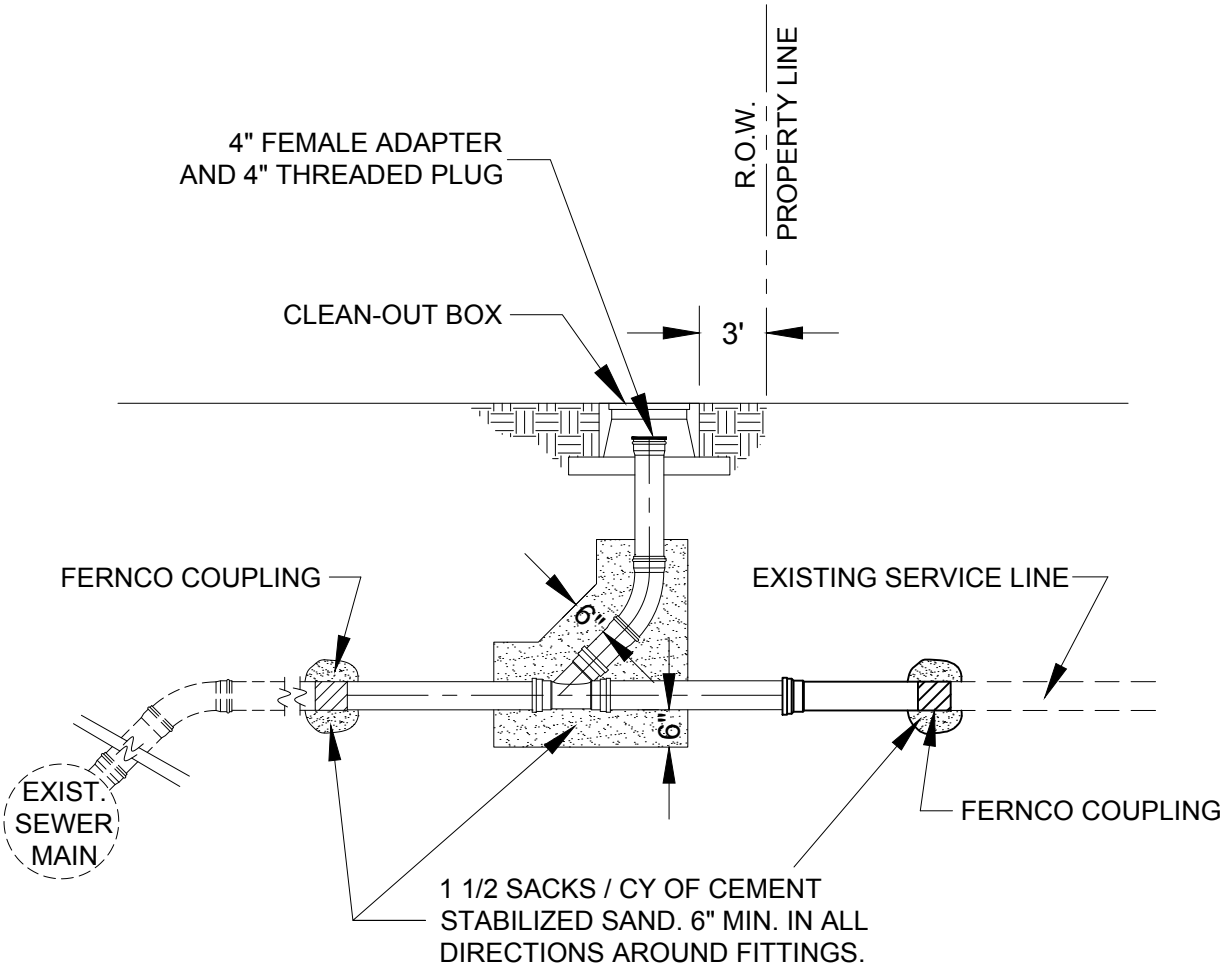

NOTE:

* REPLACE 5FT OF EXISTING SERVICE LINE ON BOTH SIDES OF WYE. USE 4" OR 6" PVC SCH 40 TO MATCH EXISTING SERVICE LINE.

* CLEAN OUT TO BE ACCESSIBLE FROM PROPERTY IT SERVES

* WRAP FERNCO'S AND 2-WAY CLEANOUT IN STABILIZED SAND OR DRY SACKRETE 6" MIN. IN ALL DIRECTIONS

* NO. 37 METER BOX WITH FIBER CONCRETE MIX - (FIBER TO BE ADDED TO MIX - 1.5 LBS. PER CU. YD.). METER BOX COVER TO BE MARKED "SEWER". CLEAN OUT TO BE SET TO GRADE AFTER BUILDING CONNECTION IS MADE. (TYP)

INSTALLATION OF A CLEAN OUT ON AN EXISTING SANITARY SEWER SERVICE CONNECTION

CITY OF BEAUMONT
WATER UTILITIES DEPARTMENT
N.T.S.

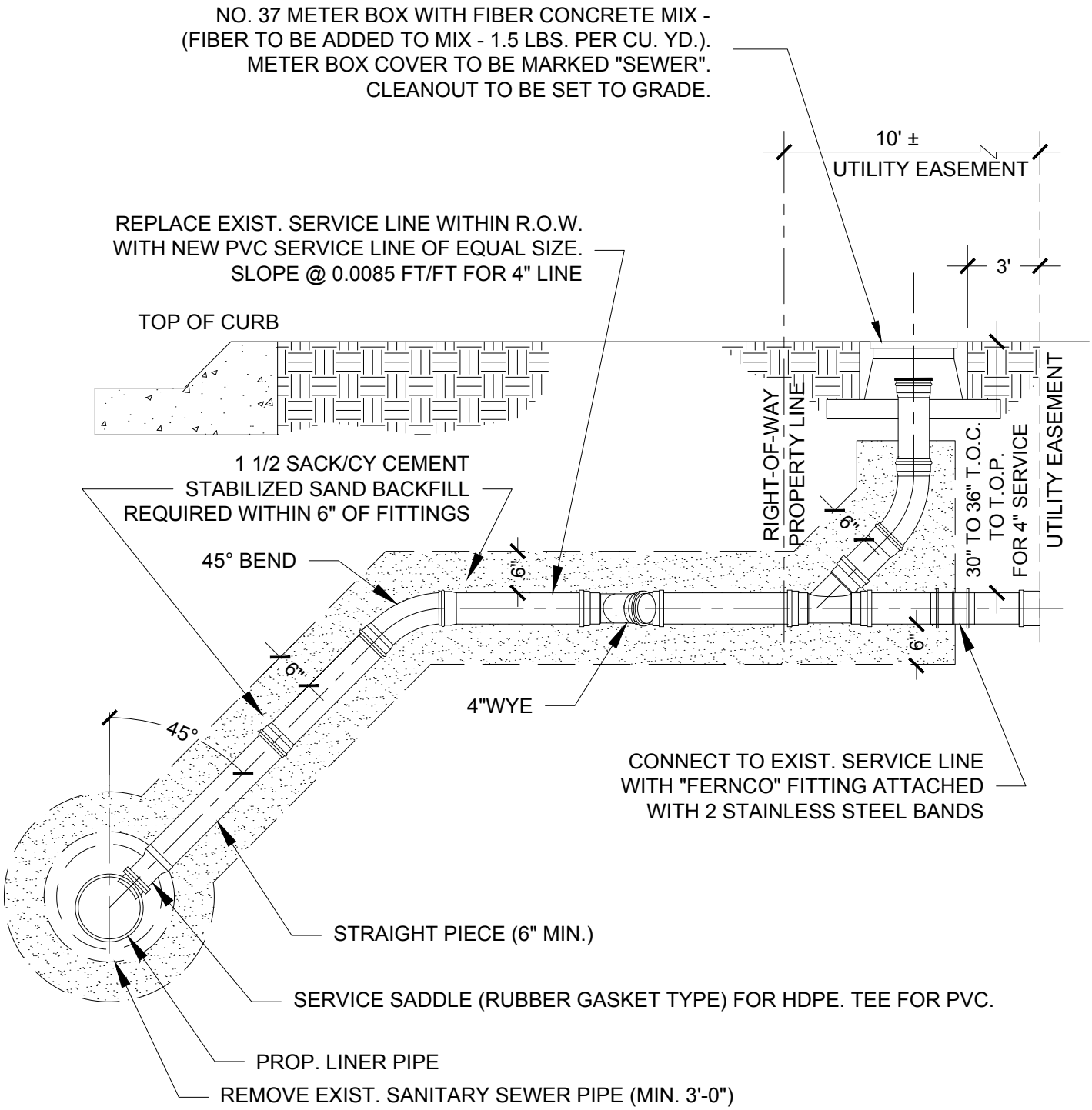

TYPICAL SANITARY SEWER SERVICE LINE REPLACEMENT ON SLIP LINED SEWER MAIN

CITY OF BEAUMONT
WATER UTILITIES DEPARTMENT
N.T.S.

REVISED: 02/14/2020

GO, NO-GO DEFLECTION TESTING MANDREL
CONSTRUCTED FROM 1/2 - INCH ANGLE IRON

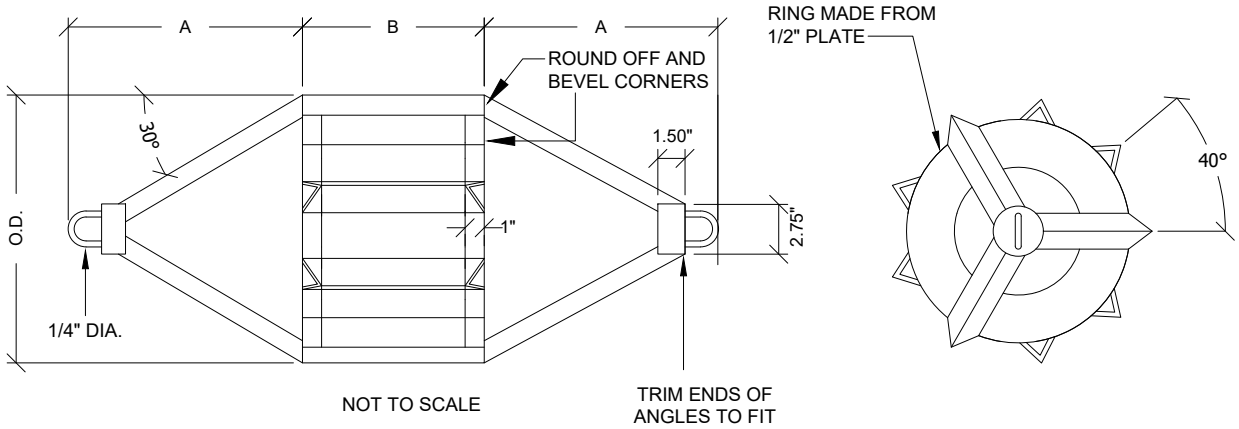

NOTE:

AFTER WELDING IS COMPLETED, TRUE THE OUTSIDE DIAMETER DIMENSION FOR THE FULL LENGTH OF "B" TO (=/-) 0.010" BY TOOL AND LATHE OR GRINDING

			Mandrel Outside Diameter (in.) For 7 1/2 % Deflection			Ring Outside Diameter (in.)			For Straight Wall-PVC	
SIZE	A (inch)	B (inch)	PSP DR 42	PSM DR 42	PSM DR 35	PSP DR 41	PSM DR 42	PSM DR 35	NOMINAL SIZE	MIN. I.D. OF PIPE
4	2.24	4	3.55		3.59	2.84		2.84	4	3.88
6	3.76	4	5.35		5.34	4.62		4.59	6	5.77
8	5.33	6	6.96	7.18	7.15	6.25	6.47	6.39	8	7.73
10	6.88	6	8.70	8.97	8.94	7.99	8.26	8.17	10	9.666
12	8.35	8	10.45	10.60	10.64	9.74	9.97	9.86	12	11.50
15	10.52	9	13.05		13.15				15	14.22
18	12.92	10			15.92				18	17.21
21	15.39	10			18.77				21	20.29
24	17.42	10			21.11				24	22.826
27	19.75	10			23.80				27	25.725

TYPICAL MANDREL DETAIL

CITY OF BEAUMONT
WATER UTILITIES DEPARTMENT
N.T.S.

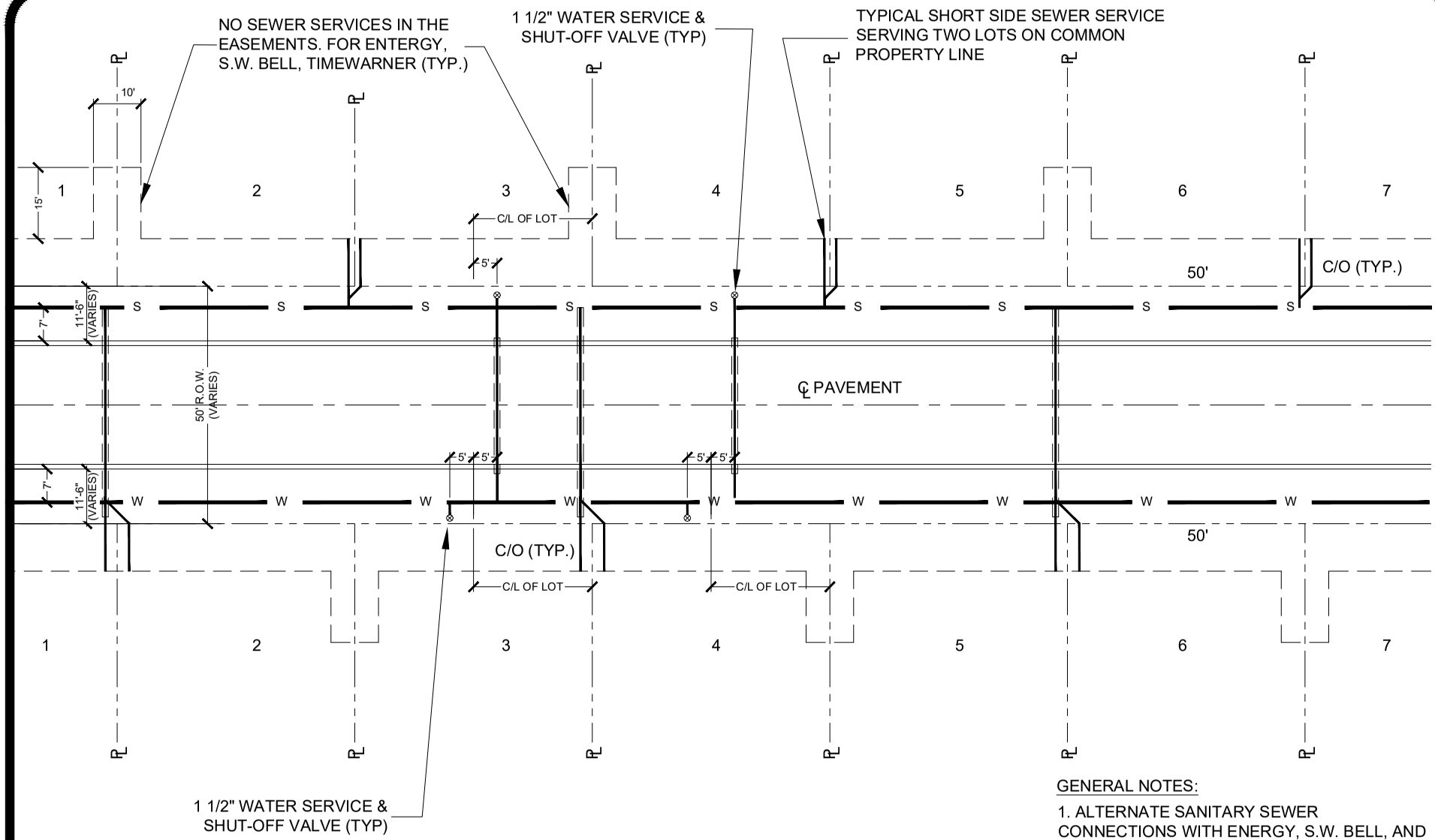

GENERAL NOTES:

1. ALTERNATE SANITARY SEWER CONNECTIONS WITH ENERGY, S.W. BELL, AND TIMEWARNER EASEMENTS.

2. WATER SERVICES ARE TO BE LOCATED 5' TO THE RIGHT OF THE CENTER LINE OF THE LOT.

3. SEE APPENDIX II FOR ALL OTHER DESIGNATED UTILITY LOCATIONS.

TYPICAL LONG AND SHORT SIDE WATER AND SANITARY SEWER SERVICE CONNECTION

CITY OF BEAUMONT
WATER UTILITIES DEPARTMENT
N.T.S.

REVISED: 12/10/2019

NOTE:

SEPARATION DISTANCES SHALL BE BASED ON STATE AND FEDERAL REGULATIONS.

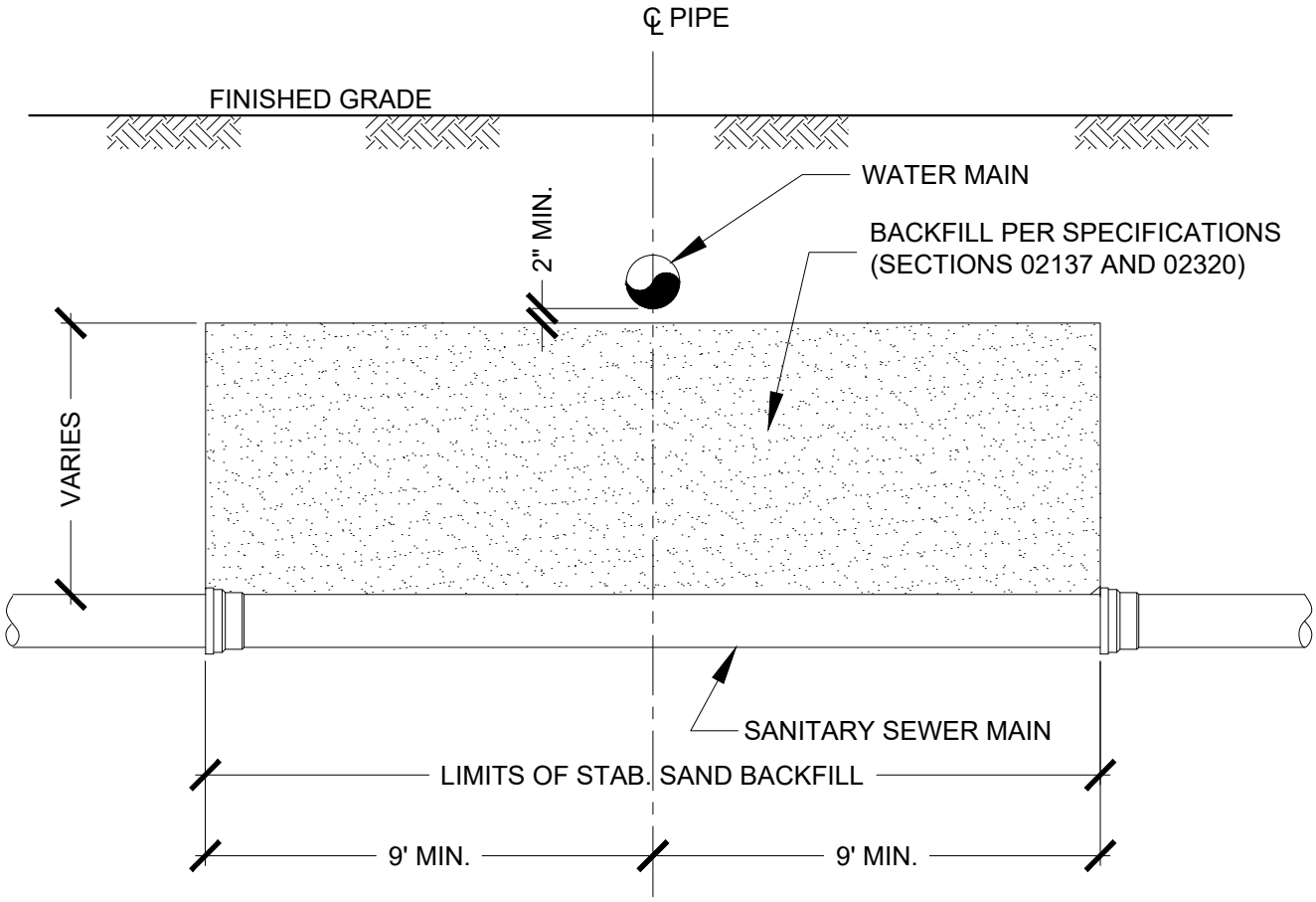

CASE	PROTECTION REQUIREMENT
PARALLEL PIPES WITHIN NINE FEET, WHERE THE COLLECTION SYSTEM PIPE IS ABOVE THE WATER SUPPLY PIPE	ENCASED IN A CASING PIPE ACCORDING TO PARAGRAPH (4) OF THIS SUBSECTION
CROSSING PIPES WITHIN NINE FEET, WHERE THE COLLECTION SYSTEM PIPE IS ABOVE THE WATER SUPPLY	ENCASED IN A CASING PIPE ACCORDING TO PARAGRAPH (5)(A) OF THIS SUBSECTION – OR – CONSTRUCTED USING 150 PER SQUARE INCH (PSI) PRESSURE CLASS PIPE ACCORDING TO PARAGRAPH (5)(B) OF THIS SUBSECTION
PARALLEL PIPES WITHIN NINE FEET, WHERE THE COLLECTION SYSTEM PIPE IS BELOW THE WATER SUPPLY PIPE	CONSTRUCTED USING 150 PSI PRESSURE CLASS PIPE ACCORDING TO PARAGRAPH (6)(A) OF THIS SUBSECTION – OR – ENCASED IN A CASING PIPE ACCORDING TO PARAGRAPH (6)(B) OF THIS SUBSECTION
CROSSING PIPES WITHIIN NINE FEET, WHERE THE COLLECTION SYSTEM PIPE IS BELOW THE WATER SUPPLY PIPE	CONSTRUCTED USING 150 PSI PRESSURE CLASS PIPE ACCORDING TO PARAGRAPH (7)(A) OF THIS SUBSECTION – OR – ENCASED IN CEMENT-STABILIZED SAND ACCORDING TO PARAGRAPH (7)(B) OF THIS SUBSECTION – OR – ENCASED IN A CASING PIPE ACCORDING TO PARAGRAPH (7)(C) OF THIS SUBSECTION
MANHOLE WITHIN NINE FEET OF A WATER SUPPLY PIPE	NO MEASURABLE LEAKAGE ACCORDING TO PARAGRAPH (8)(A) OF THIS SUBSECTION – OR – ENCASED IN CEMENT-STABILIZED SAND ACCORDING TO PARAGRAPH (8)(B) OF THIS SUBSECTION

*TABLE WAS REPRODUCED PER 30 TAC §217.53(D)(3)

TYPICAL WATER AND SANITARY SEWER MAIN CROSSING

CITY OF BEAUMONT
WATER UTILITIES DEPARTMENT
N.T.S.

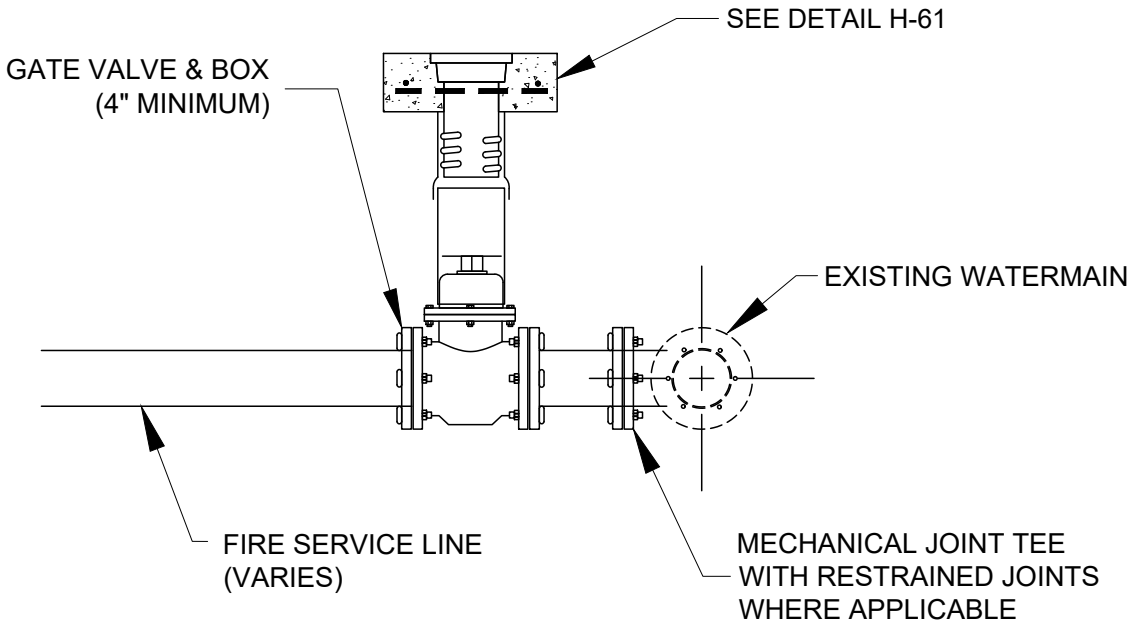

EXISTING WATER MAIN

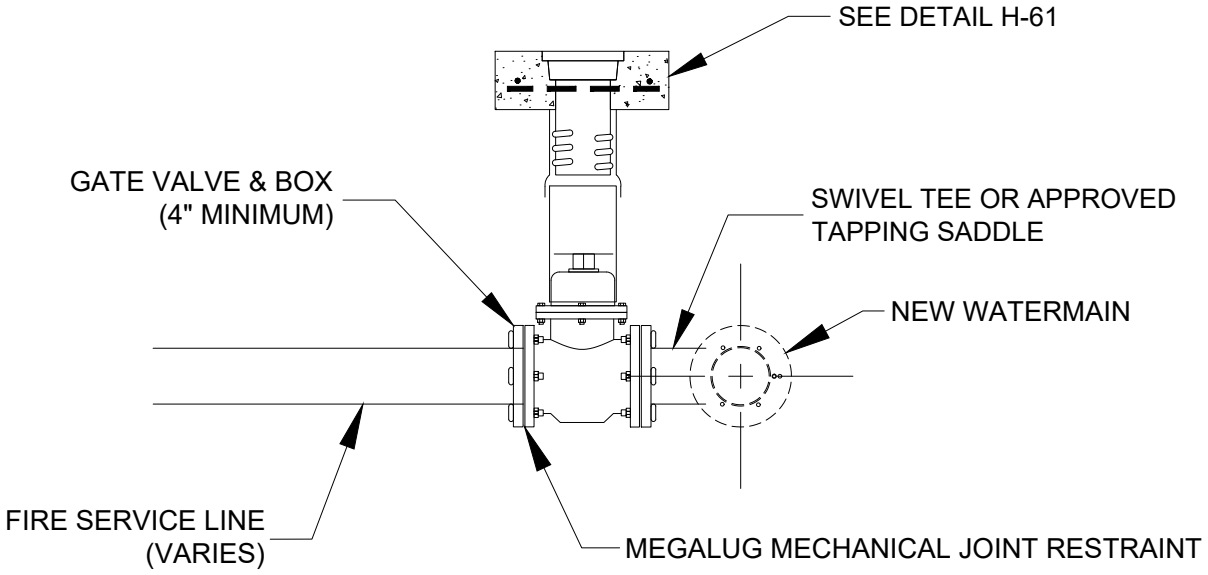

NEW WATER MAIN

TYPICAL FIRE SERVICE LINE CONNECTION
FOR EXISTING AND NEW WATER MAINS

CITY OF BEAUMONT
WATER UTILITIES DEPARTMENT
N.T.S.

REVISED: 8/7/2019

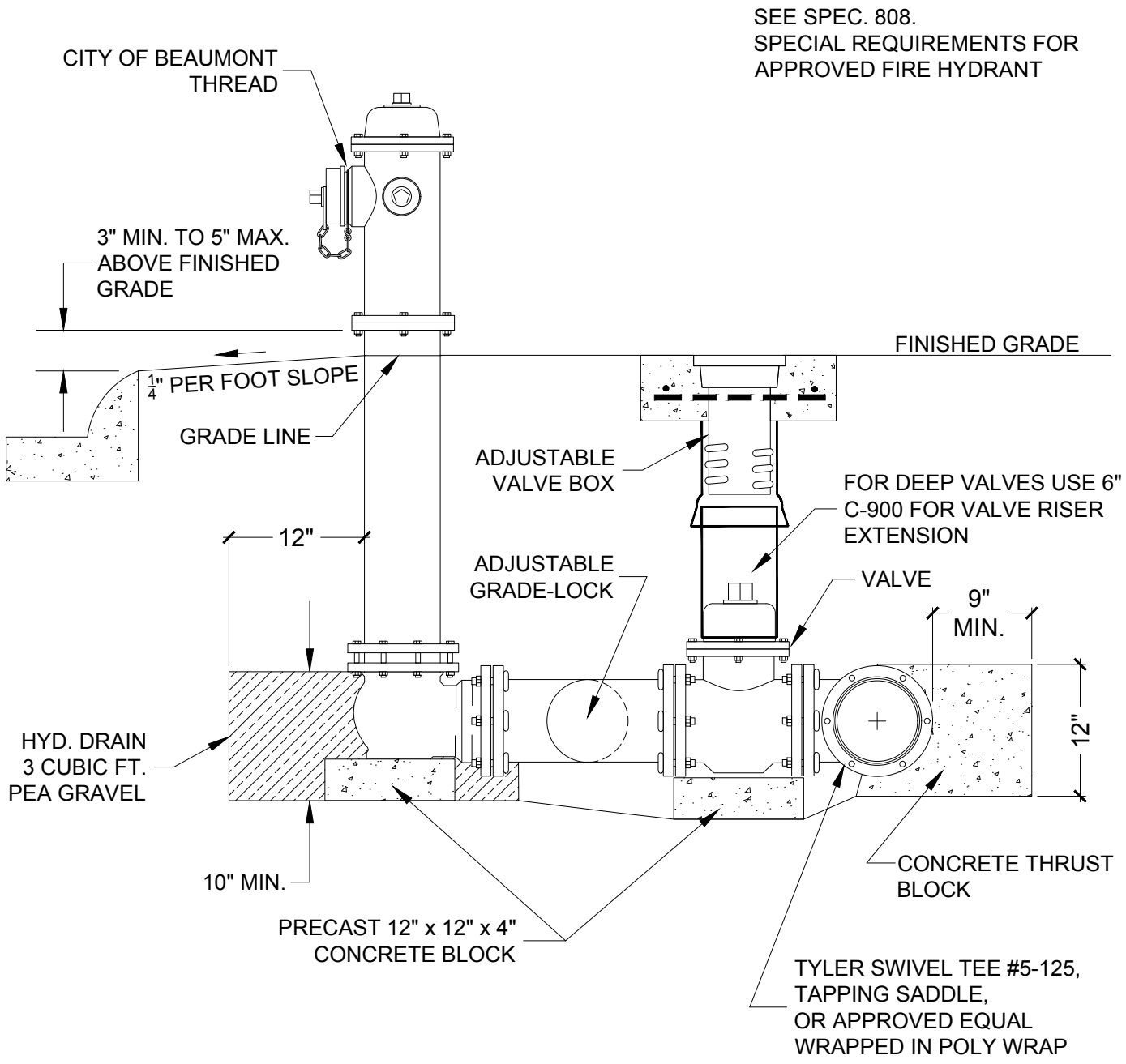

TYPICAL FIRE HYDRANT INSTALLATION

CITY OF BEAUMONT
WATER UTILITIES DEPARTMENT
N.T.S.

REVISED: 04/14/2020

NOTE:

SET TOP OF METER BOX EVEN WITH GRADE IF ALREADY LANDSCAPED. IF NOT LANDSCAPED SET TOP OF BOX 2 INCHES ABOVE TOP OF CURB. (BY CITY FORCES).

THE PLUMBING CONTRACTOR IS TO MARK THE METER BOX LOCATION WITH A STAKE & FLAGGING. LABEL WHAT SIZE METER WILL BE INSTALLED ON THE STAKE.

NOTE:

SERVICE LINE SIZES WILL VARY DEPENDING ON THE SIZE OF METER:

1" METER = 1" SERVICE LINE

1 ½" METER = 1 ½" SERVICE LINE

2" METER = 2" SERVICE LINE

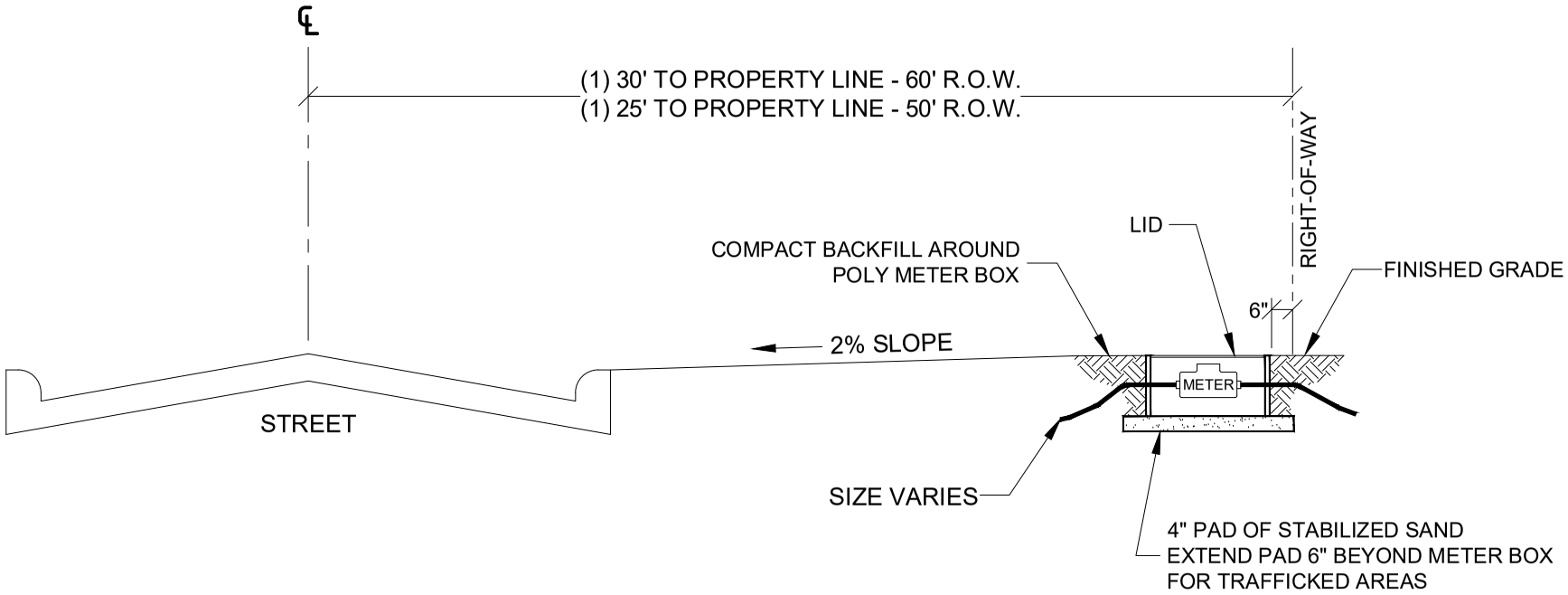

TYPICAL WATER METER INSTALLATION NEW SUBDIVISION

CITY OF BEAUMONT
WATER UTILITIES DEPARTMENT
N.T.S.

REVISED: 8/7/2019

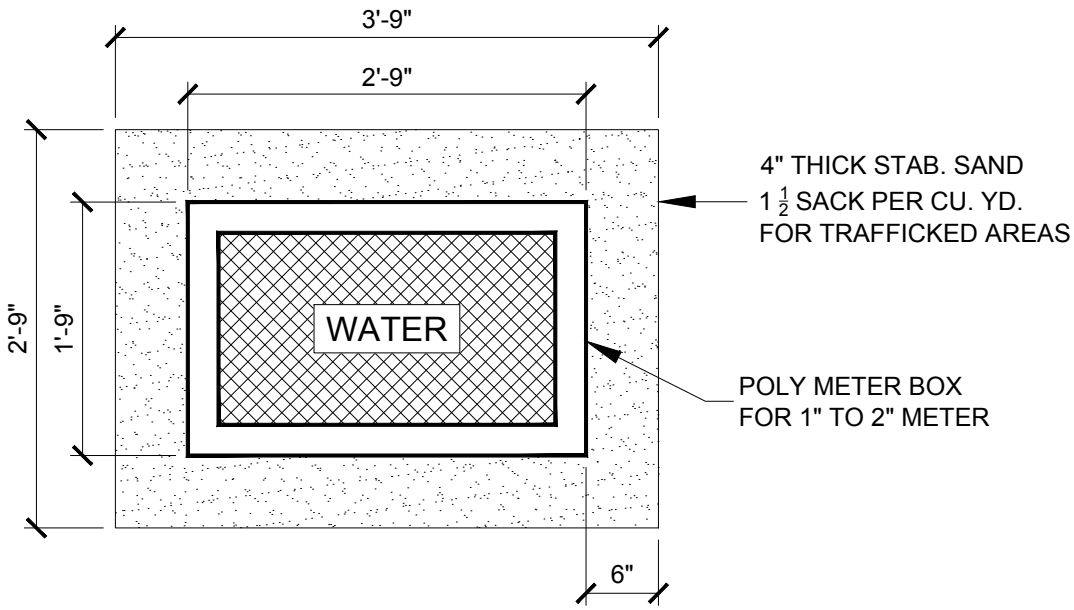

PLAN VIEW

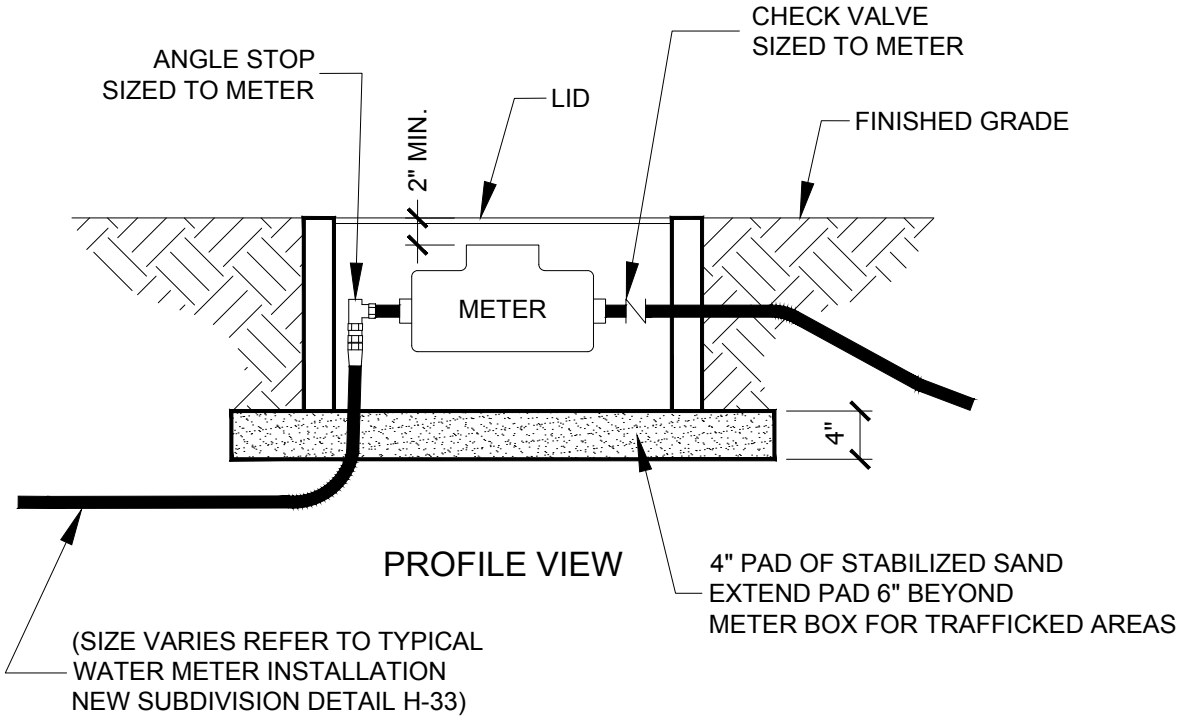

PROFILE VIEW

TYPICAL METER INSTALLATION OF 1" TO 2" METER USING A POLY METER BOX

CITY OF BEAUMONT
WATER UTILITIES DEPARTMENT
N.T.S.

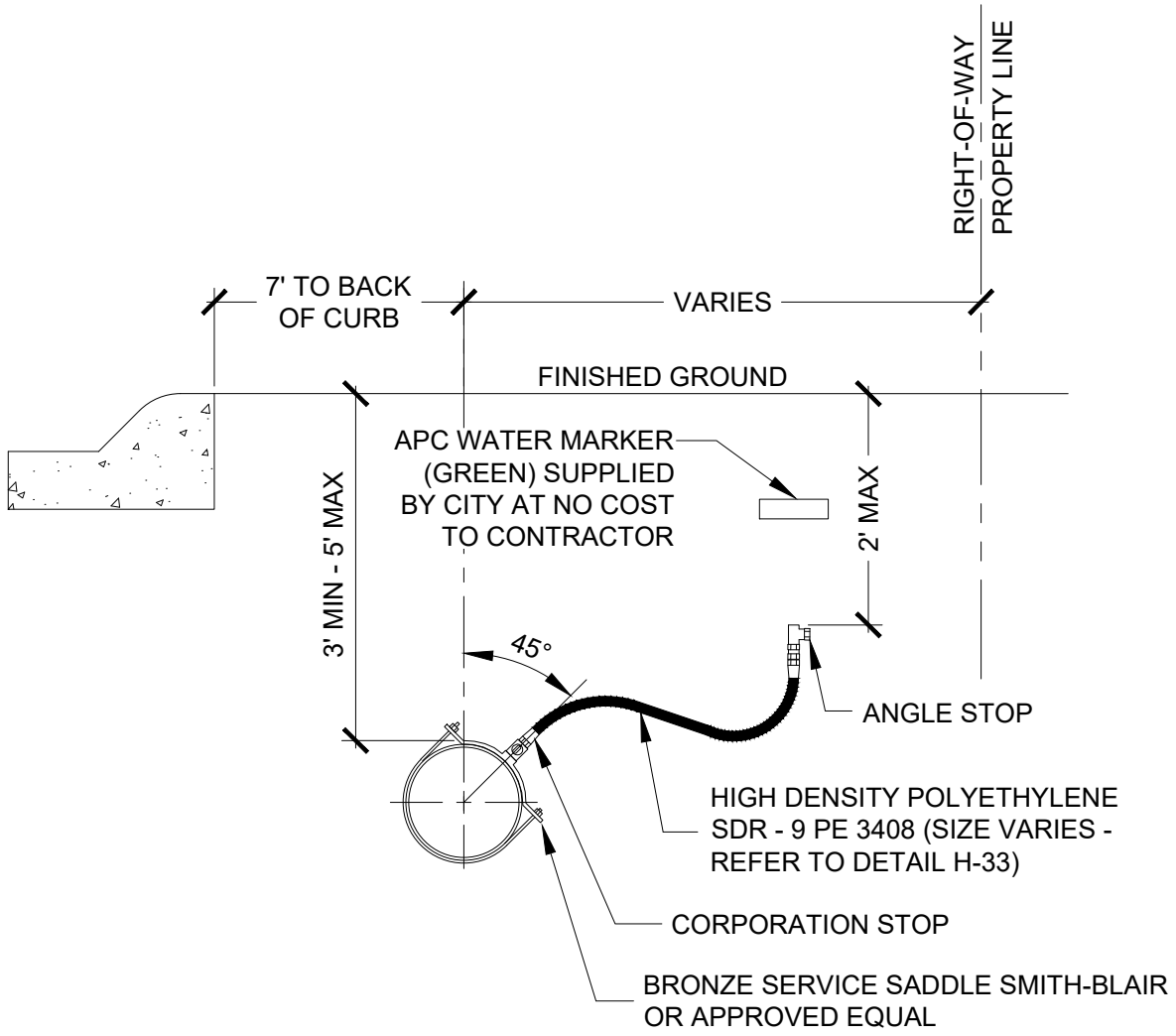

GENERAL NOTES:

1. DOUBLE STRAP ALL 1 1/2" & 2" ON 6" PIPE AND ABOVE.
2. CLOY TWIN SEAL TAPPING SADDLE STYLE 3401 OR APPROVED EQUAL FOR 2" OR 3" PVC PIPE.

TYPICAL WATER SERVICE CONNECTION

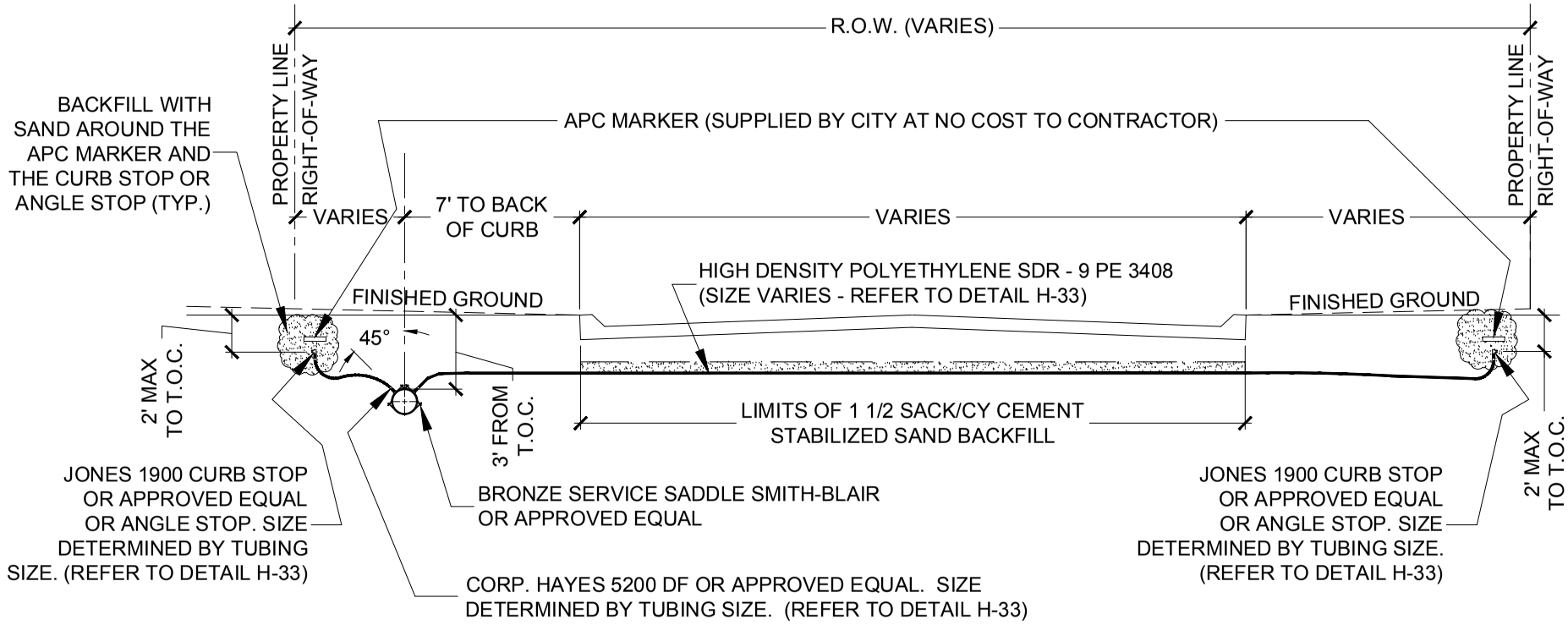

GENERAL NOTES:

1. DOUBLE STRAP ALL 1 1/2" & 2" ON 6" PIPE AND ABOVE.
2. SERVICE LINE SIZES WILL VARY DEPENDING ON THE SIZE OF METER.
3. CLOW TWIN SEAL TAPPING SADDLE STYLE 3401 OR APPROVED EQUAL FOR 2" OR 3" PVC PIPE.
4. ALL MEASUREMENTS FROM TOP AND BACK OF CURB.
5. LEAVE CURB STOP ABOVE OR ANGLE STOP ABOVE GROUND UNTIL PRESSURE TEST, FLOW TEST, LOCATION MARKED ON CURB, "W" STAMPED ON CURB OR CHISELED ON CURB AND LOCATOR DISC'S DELIVERED.

TYPICAL LONG AND SHORT SIDE WATER SERVICE CONNECTION AND STREET CROSSING DETAILS

CITY OF BEAUMONT
WATER UTILITIES DEPARTMENT
N.T.S.

REVISED: 8/7/2019

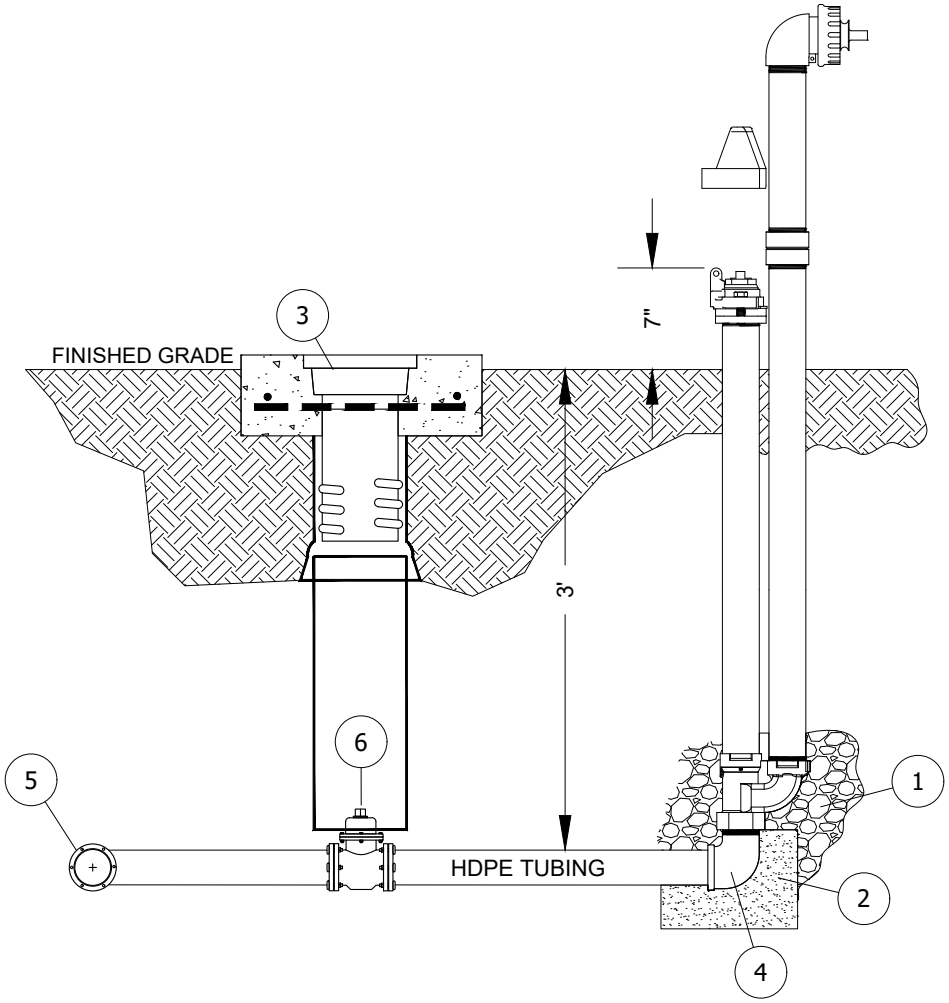

ITEM	ITEM / DESCRIPTION
1	CRUSHED ROCK
2	1 $\frac{1}{2}$" SACK CEMENT STABILIZED SAND
3	VALVE BOX (ADJUSTABLE) PER DETAIL H-61
4	2" STREET ELBOW
5	2" SADDLE TAP ON EXIST. WATER MAIN
6	2" CURB STOP

DEAD END FLUSH OUT DETAIL (FOR 2" LINES)

CITY OF BEAUMONT
WATER UTILITIES DEPARTMENT
N.T.S.

REVISED: 10/26/2020

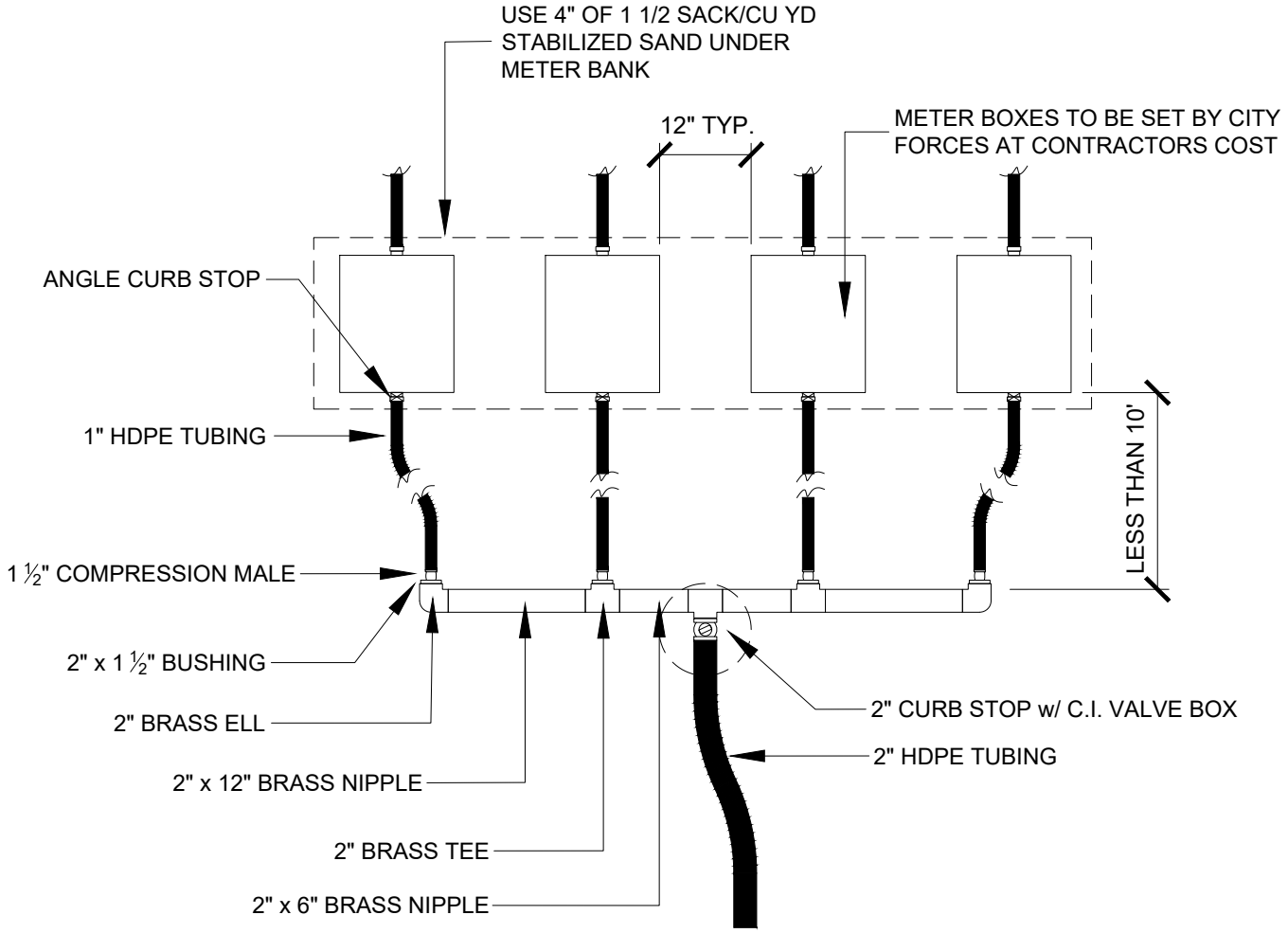

NOTES:

- ALL FITTINGS MUST BE BRASS
- NO MORE THAN 8 METERS ON MANIFOLD
- PLACE TOPS OF ALL METER BOXES AND VALVE BOX AT SAME ELEVATION, EVEN WITH GRADE
- IF METER AREA IS SURROUNDED BY CONCRETE THEN METER BANK AREA IS TO BE BACKFILLED WITH CEMENT STABILIZED SAND.
- BOLLARDS ARE TO BE SET AT EACH CORNER.

TYPICAL METER BANK INSTALLATION

FOR 1" METERS

CITY OF BEAUMONT
WATER UTILITIES DEPARTMENT
N.T.S.

REVISED: 8/7/2019

H-40

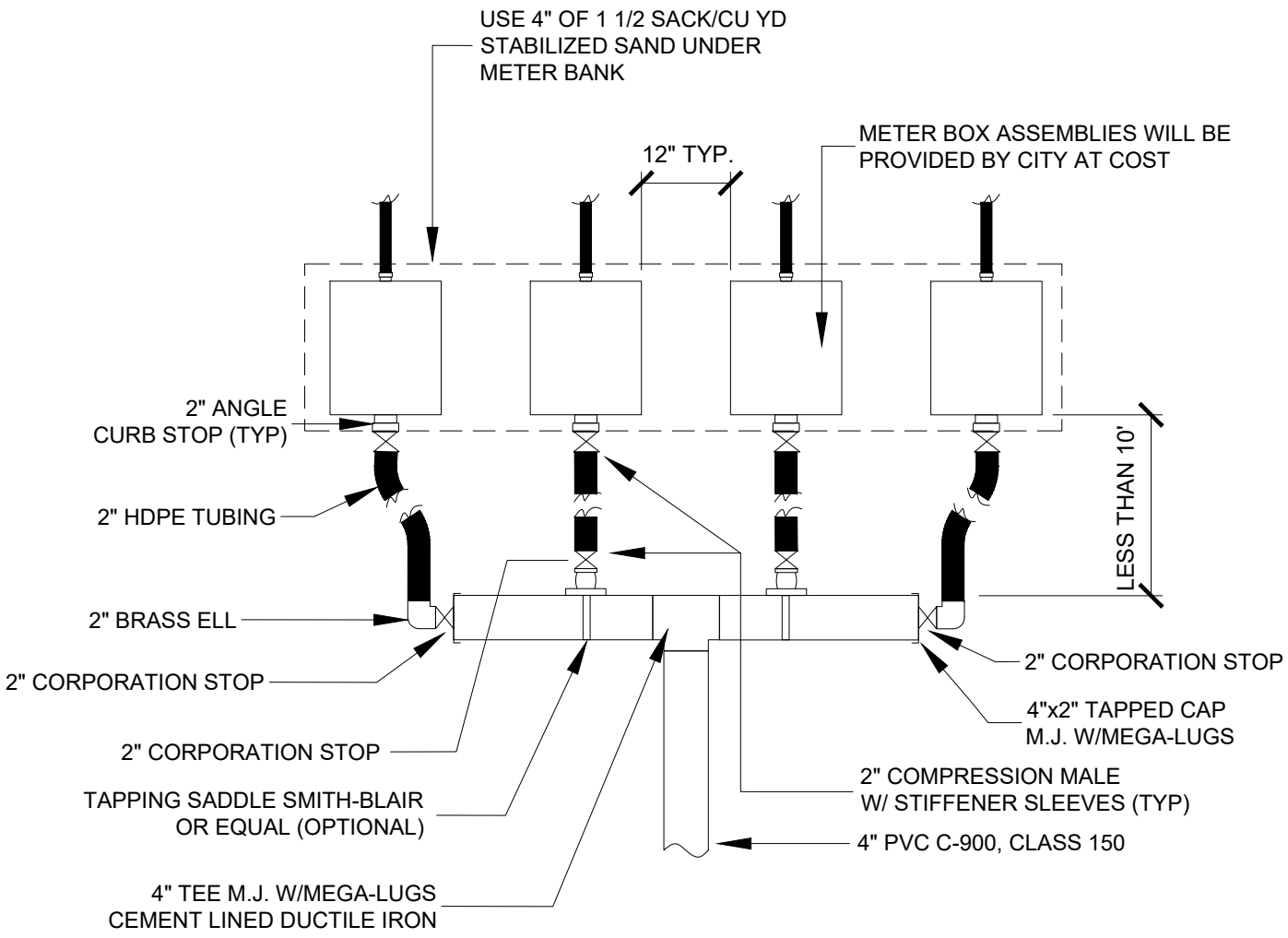

NOTES:

- ALL FITTINGS MUST BE BRASS OR CEMENT LINED DUCTILE IRON
- NO MORE THAN 8 METERS ON MANIFOLD
- PLACE TOPS OF ALL METER BOXES AND VALVE BOXES AT SAME ELEVATION, EVEN WITH GRADE
- IF METER AREA IS SURROUNDED BY CONCRETE THEN METER BANK AREA IS TO BE BACKFILLED WITH CEMENT STABILIZED SAND.
- BOLLARDS ARE TO BE SET AT EACH CORNER.

TYPICAL METER BANK INSTALLATION

FOR 1 ½" AND 2" METERS

CITY OF BEAUMONT
WATER UTILITIES DEPARTMENT
N.T.S.

REVISED: 8/8/2019

H-41

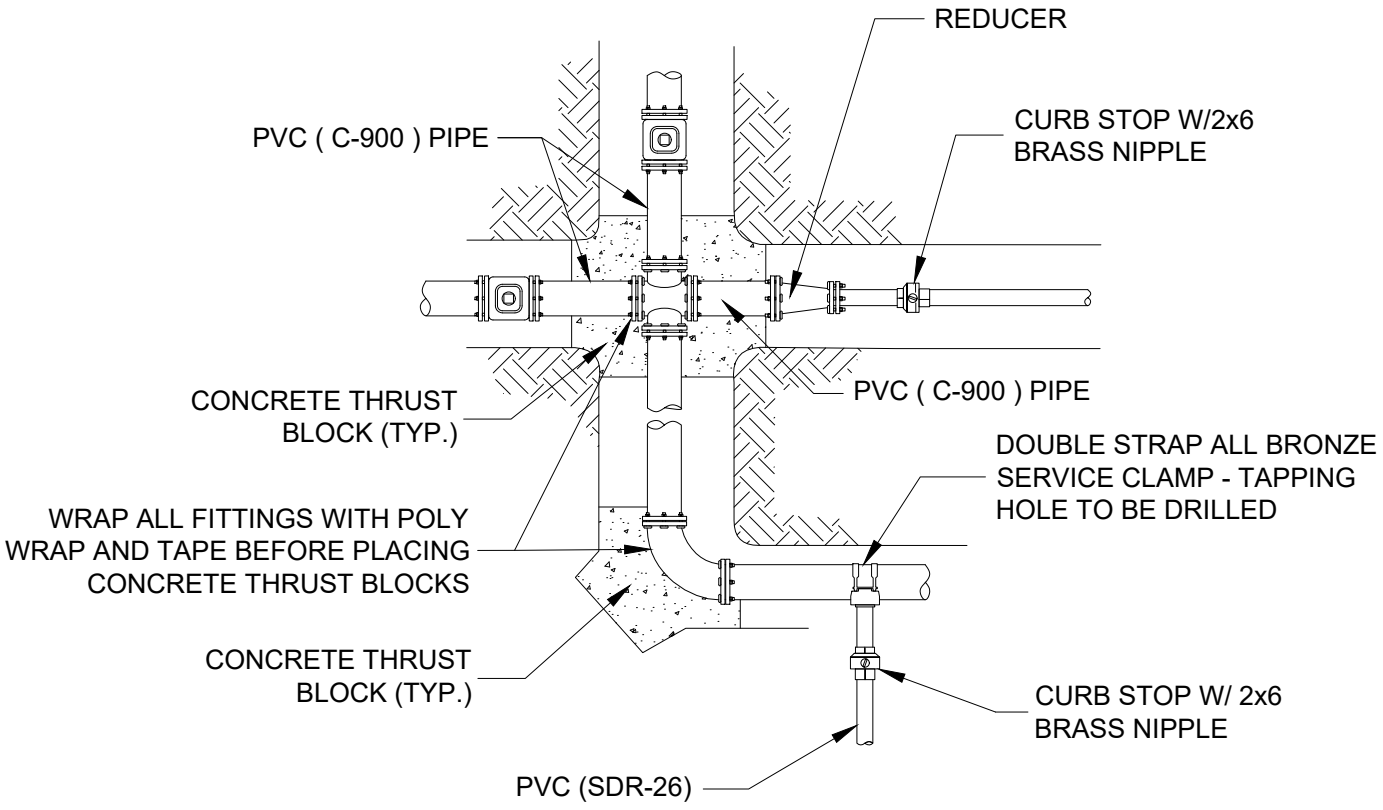

NOTE:
WRAP ALL FITTINGS WITH POLY WRAP AND TAPE

ABIDE BY ALL APPLICABLE STATE AND
FEDERAL REGULATIONS.

TYPICAL FITTINGS & CONCRETE THRUST BLOCK INSTALLATION

CITY OF BEAUMONT
WATER UTILITIES DEPARTMENT
N.T.S.

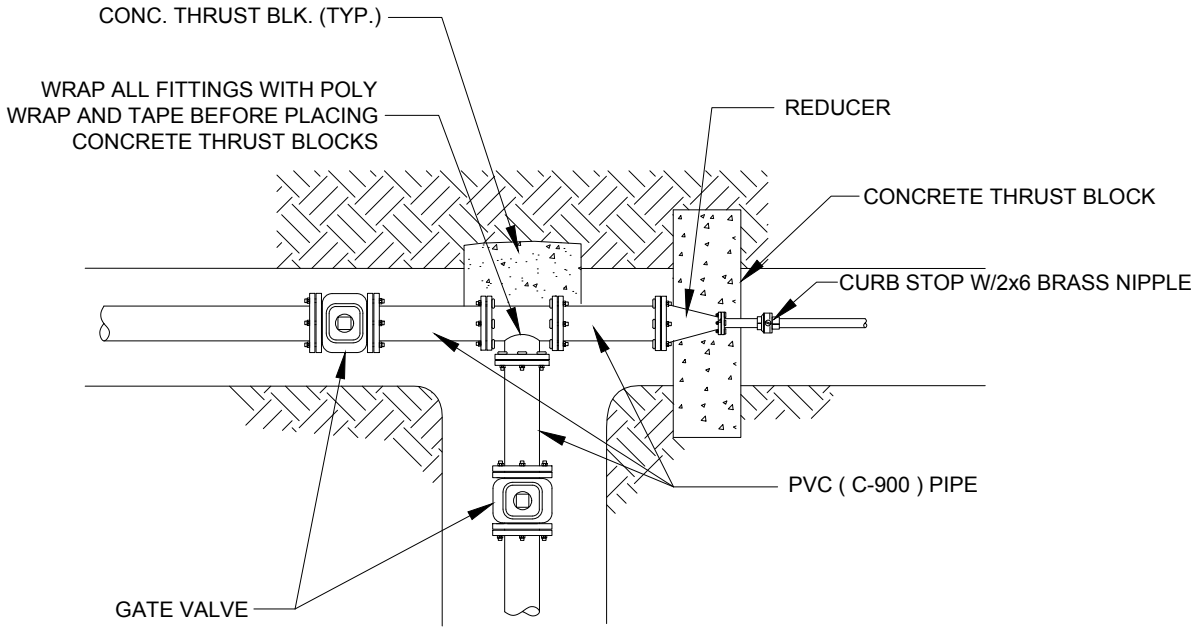

NOTE:

1. ALL BLOCKING TO UNDISTURBED TRENCH WALL

2. WRAP ALL FITTINGS WITH POLY WRAP AND TAPE

ABIDE BY ALL APPLICABLE STATE AND FEDERAL REGULATIONS.

TYPICAL FITTINGS & CONCRETE THRUST BLOCK INSTALLATION

CITY OF BEAUMONT
WATER UTILITIES DEPARTMENT
N.T.S.

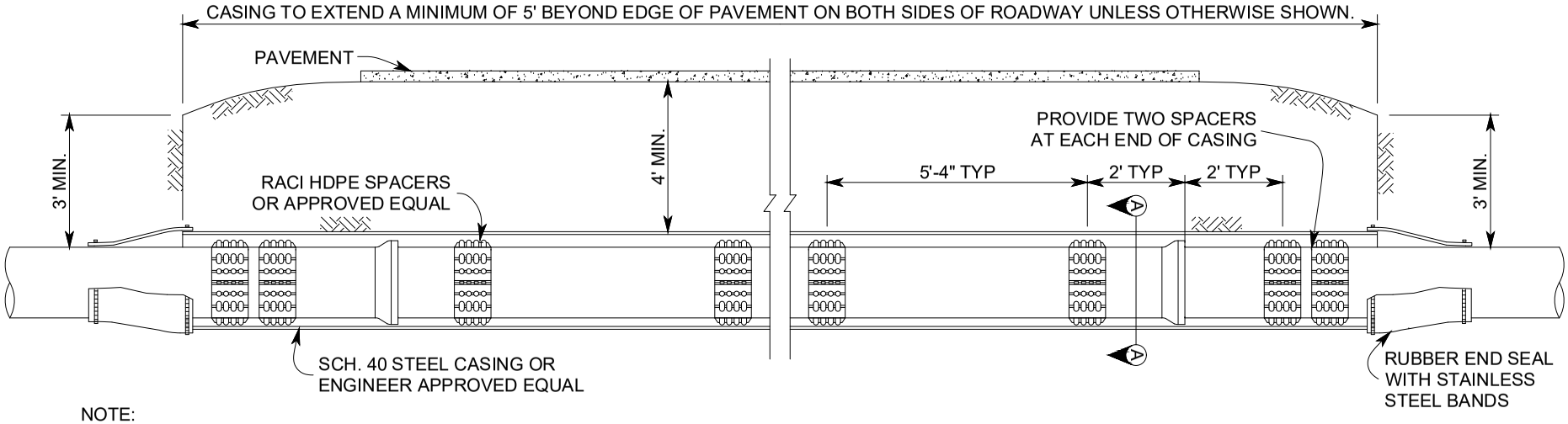

NOTE:
SPACERS SHALL BE SIZED TO CENTER
PIPE IN CASING AND CLEAR COUPLING

CASING DETAIL

TYPICAL LONGITUDINAL SECTION

(TUNNEL CONSTRUCTION)

NOTE:
CASING PIPE SIZE TO BE DETERMINED
BY THE PROPOSED SIZE OF PIPE.

TYPICAL CASING DETAIL

CITY OF BEAUMONT
WATER UTILITIES DEPARTMENT
N.T.S.

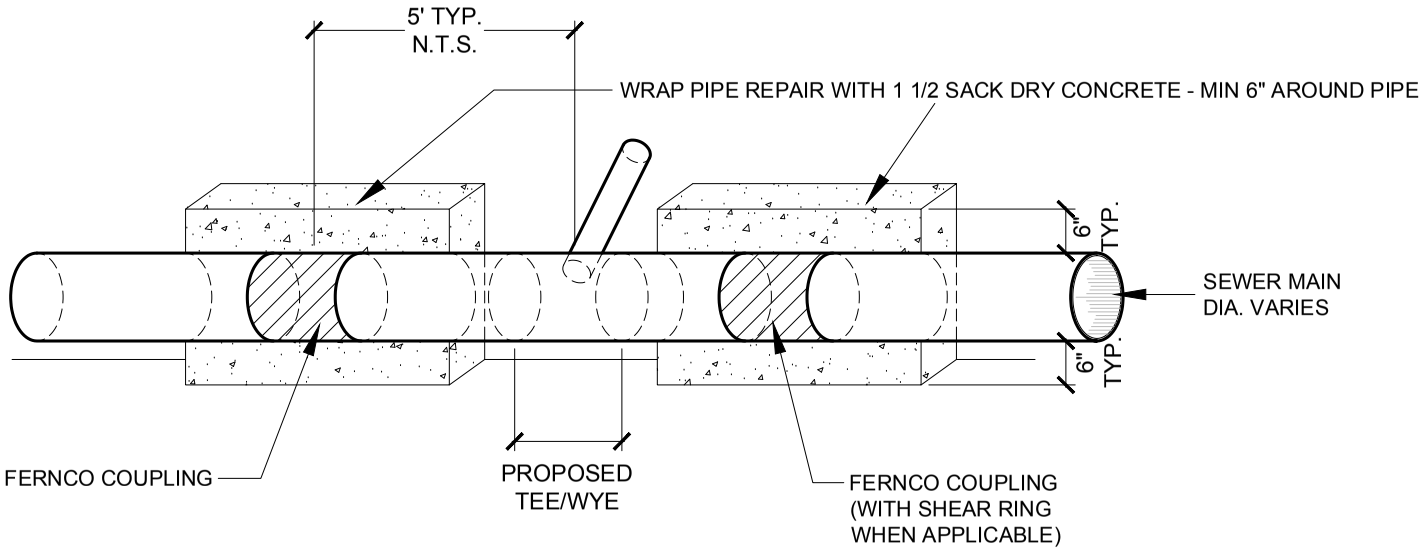

TYPICAL MAIN LINE REPAIR

NOTE:

WHEN CUTTING IN A WYE OR TEE ON THE MAIN SEWER LINE REPLACE 5FT OF EXISTING MAIN LINE ON EACH SIDE OF THE WYE OR TEE AND WRAP WITH DRY CONCRETE 6" AROUND PIPE

SEE H-47 FOR TRENCH BACKFILLING.

MAIN LINE REPAIR DETAIL

CITY OF BEAUMONT
WATER UTILITIES DEPARTMENT
N.T.S.

REVISED: 8/9/2019

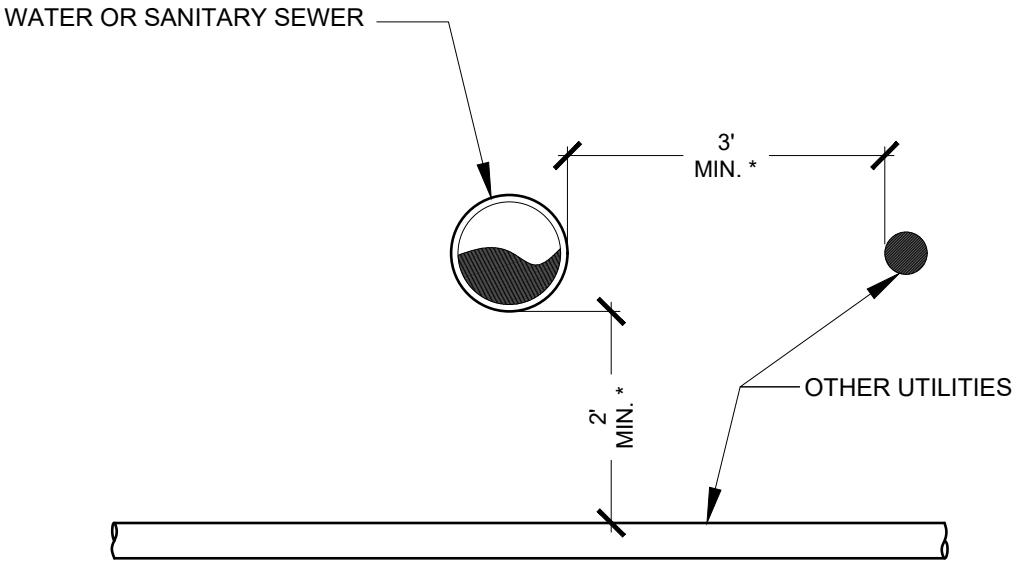

* MINIMUM CLEARANCE ON ALL UTILITY CROSSINGS OR AS APPROVED BY ENGINEER.

TYPICAL UTILITY CROSSING

CITY OF BEAUMONT
WATER UTILITIES DEPARTMENT
N.T.S.

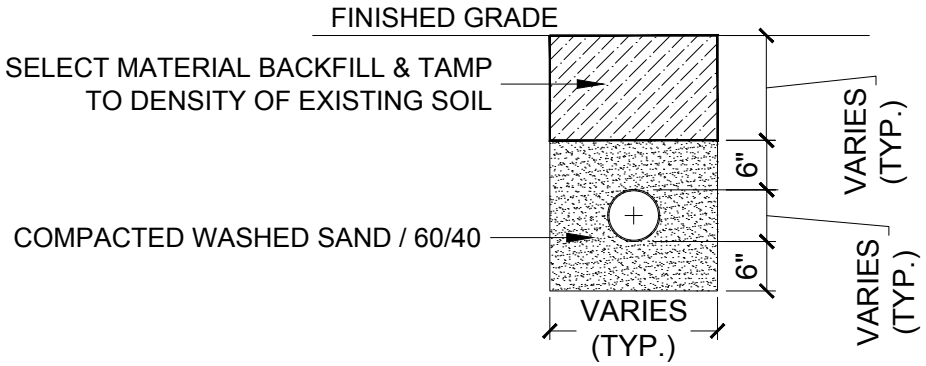

TYPICAL TRENCH BACKFILLING (AWAY FROM ROAD RIGHT-OF-WAY)

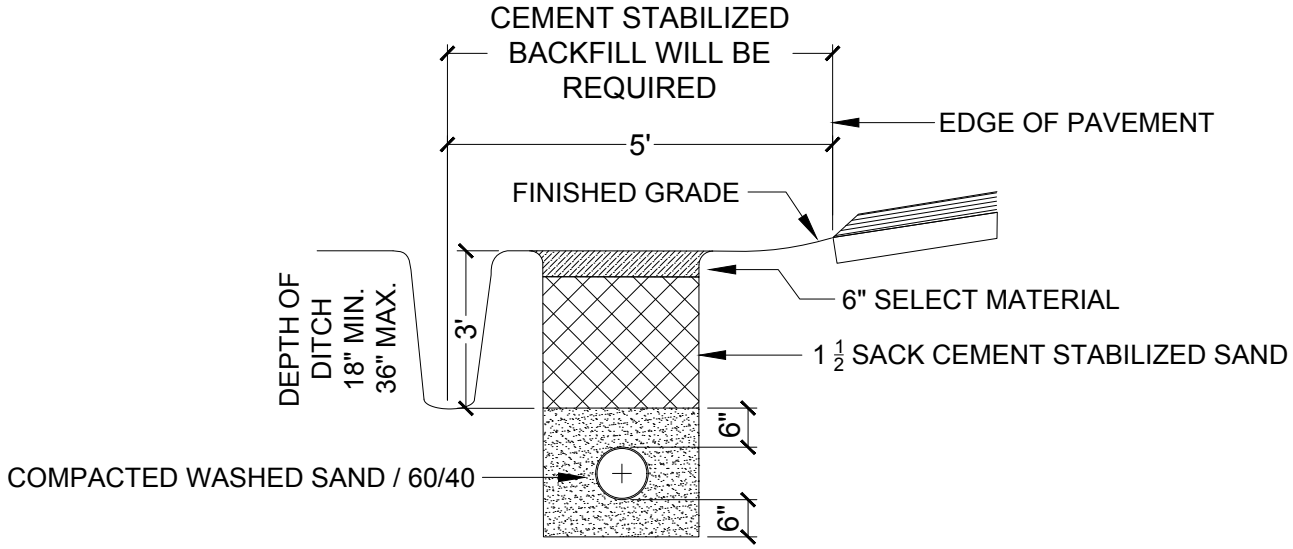

TYPICAL SECTION AT EDGE OF ROADWAY

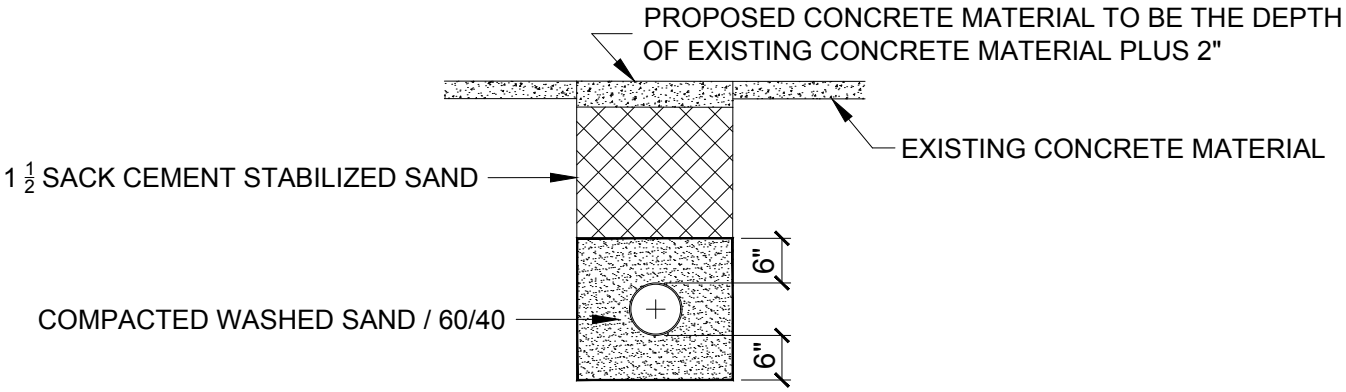

TYPICAL TRENCH BACKFILLING (UNDER CONCRETE PAVEMENT)

TYPICAL ROAD & TRENCH BACKFILLING

CITY OF BEAUMONT
WATER UTILITIES DEPARTMENT
N.T.S.

REVISED: 04/13/2020

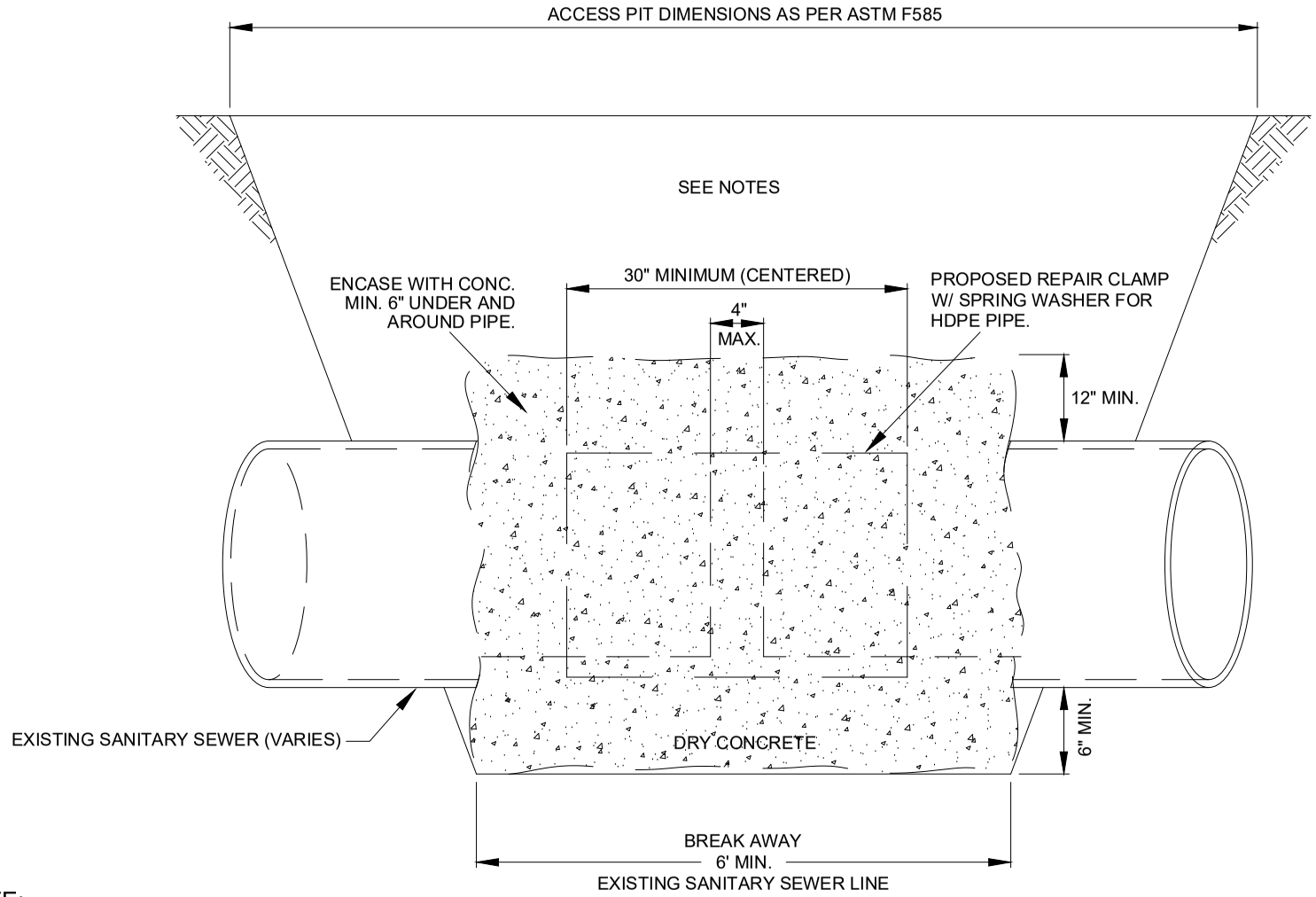

NOTE:

1. BREAK AWAY EXISTING SANITARY SEWER LINE (6.0' MIN).
2. INSTALL REPAIR CLAMP WITH STAINLESS STEEL INSERTS. INSERTS SHALL MATCH I.D. OF PIPE.
3. BACKFILL 12" ABOVE & BELOW EXIST. SAN. SWR. LINE W/ CONCRETE. CONTRACTOR TO SUPPORT LINER PIPE TO ELIMINATE SAGS WHILE BACKFILLING.
4. SEE H-47 FOR TRENCH BACKFILLING.

TYPICAL INSERTION PIT CLOSURE FULL CIRCLE CLAMP REPAIR

CITY OF BEAUMONT
WATER UTILITIES DEPARTMENT
N.T.S.

REVISED: 09/11/2019

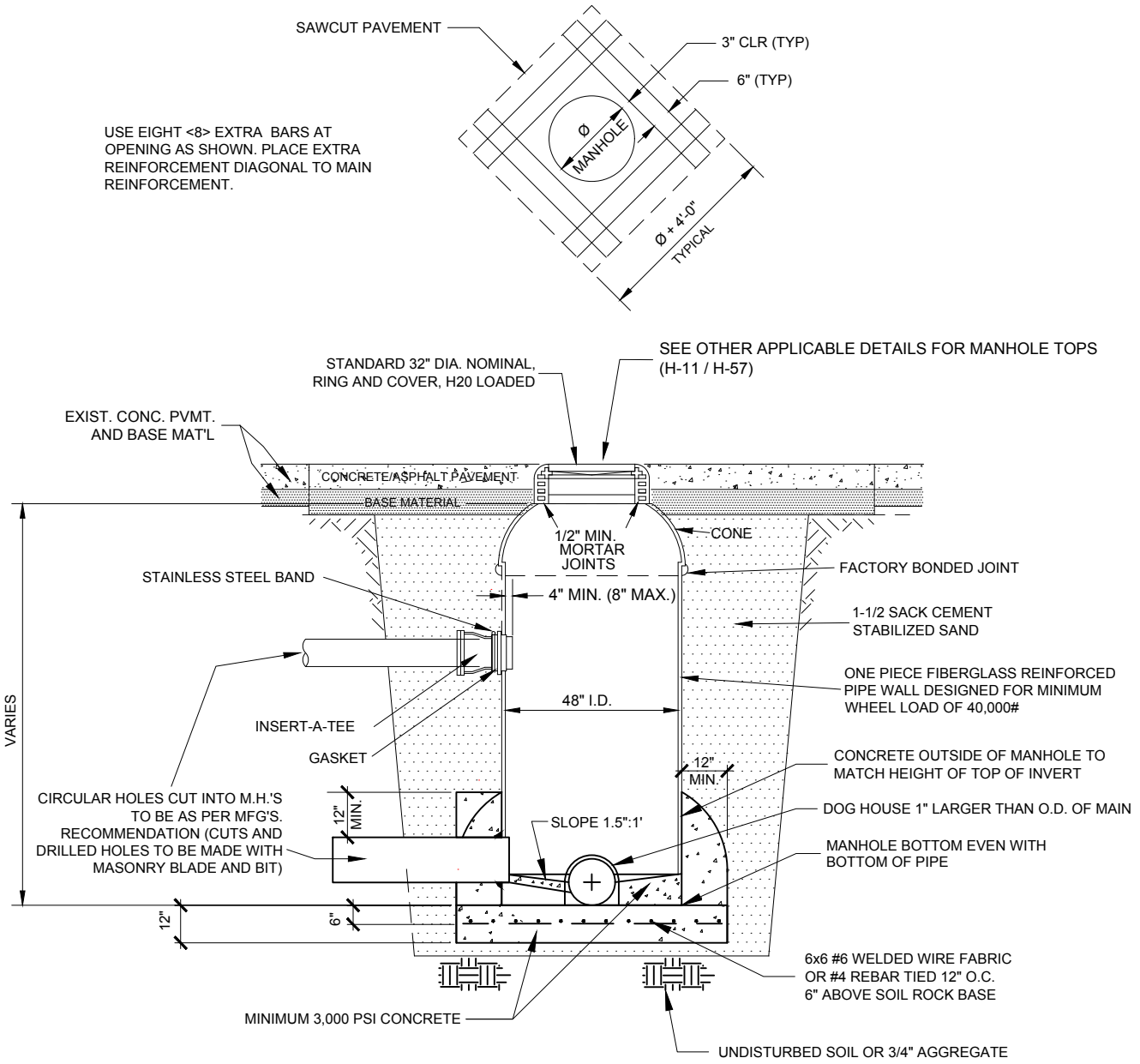

NOTES:
D3753-79 (STANDARD SPECIFICATION FOR GLASS FIBER-REINFORCED POLYESTER MANHOLES) ALL MANHOLES SUPPLIED WITH CONES SHALL BE CERTIFIED TO COMPLY WITH ANSI/ASTM INSTALLATION SHALL COMPLY WITH MANUFACTURERS RECOMMENDED INSTALLATION INSTRUCTIONS.

NOTE:
REPLACE CONCRETE AND BASE MATERIAL TO ORIGINAL CONDITION OR BETTER WITH TWO ADDITIONAL INCHES OF CONCRETE AND BASE MATERIAL

REFER TO SPECIFICATION SECTION 3301 FOR FIBERGLASS MANHOLE STIFFNESS - THICKNESS.

MANHOLE REHABILITATION
TYPICAL MANHOLE IN CONCRETE / ASPHALT PAVEMENT

CITY OF BEAUMONT
WATER UTILITIES DEPARTMENT
N.T.S.

REVISED: 04/16/2020

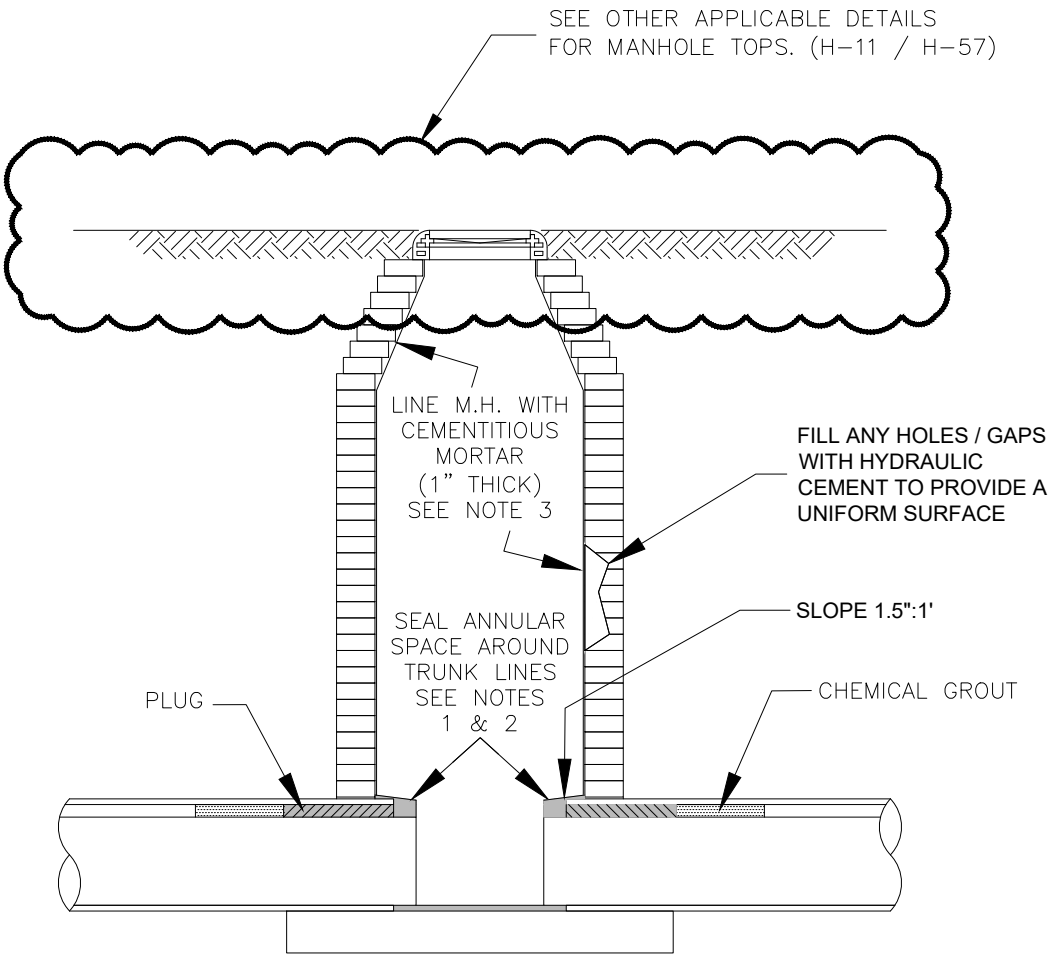

NOTES:

1. IF A GAP IS PRESENT AROUND THE TRUNK LINE, USE "OAKUM SOAKUM" TO PLUG THE ENTIRE GAP AROUND THE PIPES AND SEAL THE FACE WITH CEMENTITIOUS MORTAR, INSTALL A "STINGER" TO INJECT CHEMICAL GROUT TO SEAL ANNULAR SPACE.

2. IF NO GAP IS PRESENT AROUND THE TRUNK LINE, DRILL THRU THE EXISTING PLUG AROUND THE TRUNK LINE AND INSTALL A "STINGER" TO INJECT CHEMICAL GROUT TO SEAL ANNULAR SPACE.

3. SEAL ACTIVE LEAKS / WATER INTRUSION WITH HYDRAULIC CEMENT OR CHEMICAL GROUT PRIOR TO LINING WITH CEMENTITIOUS LINER.

MANHOLE REHABILITATION
TYPICAL BRICK MANHOLE

CITY OF BEAUMONT
WATER UTILITIES DEPARTMENT
N.T.S.

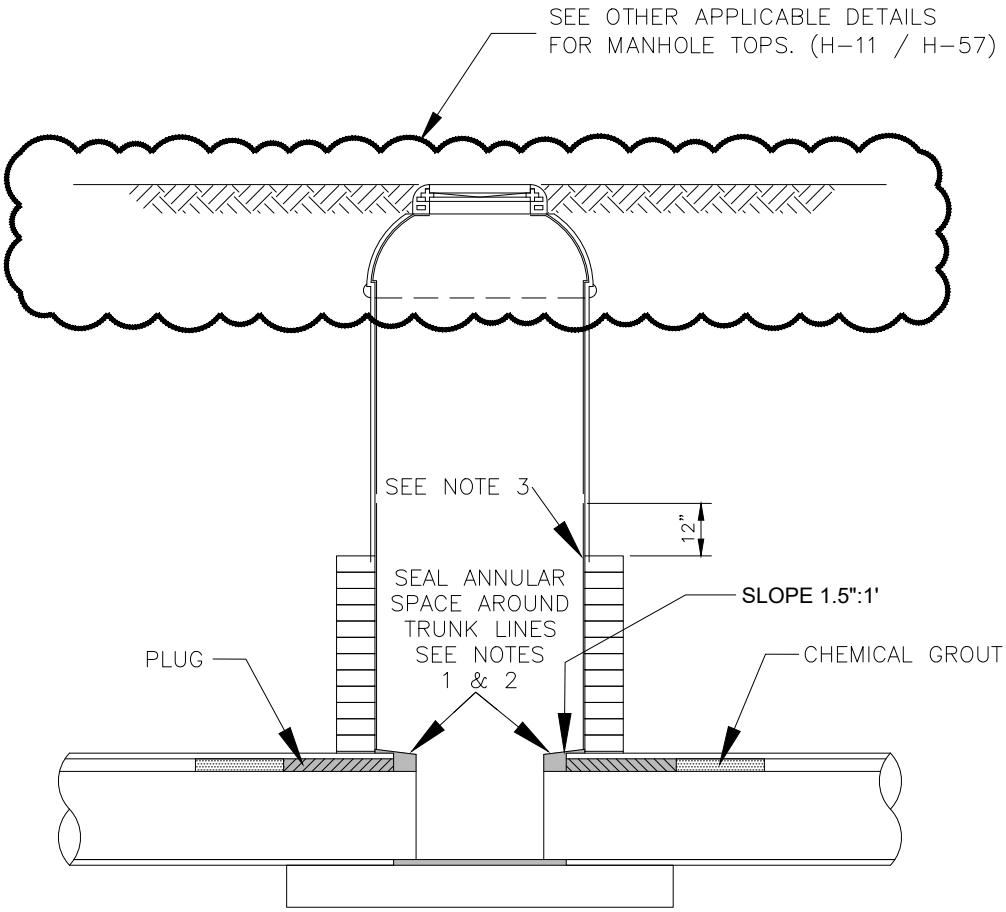

NOTES:

1. IF A GAP IS PRESENT AROUND THE TRUNK LINE, USE "OAKUM SOAKUM" TO PLUG THE ENTIRE GAP AROUND THE PIPES AND SEAL THE FACE WITH CEMENTITIOUS MORTAR, INSTALL A "STINGER" TO INJECT CHEMICAL GROUT TO SEAL ANNULAR SPACE.

2. IF NO GAP IS PRESENT AROUND THE TRUNK LINE, DRILL THRU THE EXISTING PLUG AROUND THE TRUNK LINE AND INSTALL A "STINGER" TO INJECT CHEMICAL GROUT TO SEAL ANNULAR SPACE.

3. LINE THE BRICK PORTION OF THE MANHOLE WITH CEMENTITIOUS MORTAR, 1" THICK. FILL ANY HOLES/GAPS WITH HYDRAULIC CEMENT TO PROVIDE A UNIFORM SURFACE.

4. SEAL GAPS AROUND INCOMING SERVICE LINES THROUGH THE FIBERGLASS SECTION OF THE MANHOLE BY INJECTING CHEMICAL GROUT AROUND THE SERVICE LINE TO SEAL GAP AND INSTALL A CEMENTITIOUS RING AROUND THE SERVICE LINE (INSIDE). THE WIDTH OF THE RING SHALL BE EQUAL TO THE DIAMETER OF THE SERVICE LINE AND SHALL BE 1" IN THICKNESS.

MANHOLE REHABILITATION
TYPICAL COMBINATION MANHOLE (BRICK / FIBERGLASS)

CITY OF BEAUMONT
WATER UTILITIES DEPARTMENT
N.T.S.

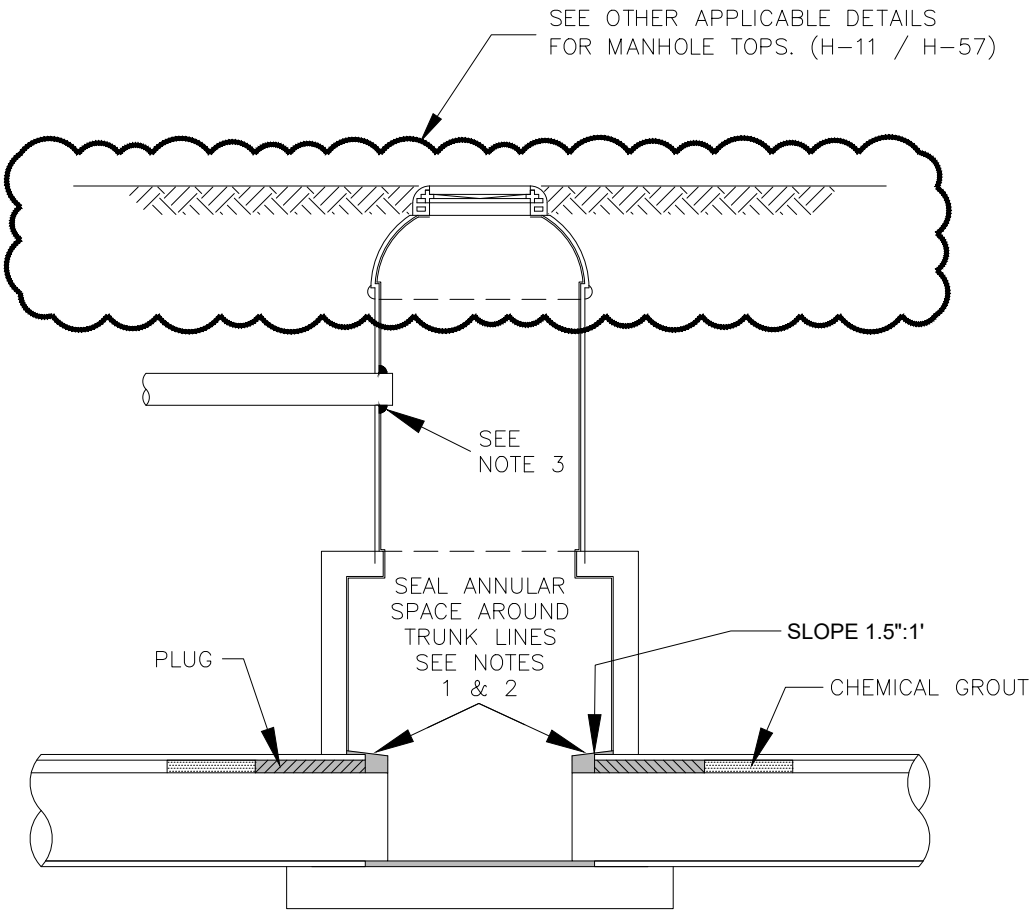

NOTES:

1. IF A GAP IS PRESENT AROUND THE TRUNK LINE, USE "OAKUM SOAKUM" TO PLUG THE ENTIRE GAP AROUND THE PIPES AND SEAL THE FACE WITH CEMENTITIOUS MORTAR, INSTALL A "STINGER" TO INJECT CHEMICAL GROUT TO SEAL ANNULAR SPACE.

2. IF NO GAP IS PRESENT AROUND THE TRUNK LINE, DRILL THRU THE EXISTING PLUG AROUND THE TRUNK LINE AND INSTALL A "STINGER" TO INJECT CHEMICAL GROUT TO SEAL ANNULAR SPACE.

3. SEAL GAPS AROUND INCOMING SERVICE LINES THROUGH THE FIBERGLASS SECTION OF THE MANHOLE BY INJECTING CHEMICAL GROUT AROUND THE SERVICE LINE TO SEAL GAP AND INSTALL A CEMENTITIOUS RING AROUND THE SERVICE LINE (INSIDE). THE WIDTH OF THE RING SHALL BE EQUAL TO THE DIAMETER OF THE SERVICE LINE AND SHALL BE 1" IN THICKNESS.

MANHOLE REHABILITATION
TYPICAL COMBINATION MANHOLE (CONCRETE / FIBERGLASS)

CITY OF BEAUMONT
WATER UTILITIES DEPARTMENT
N.T.S.

REVISED: 08/11/2021

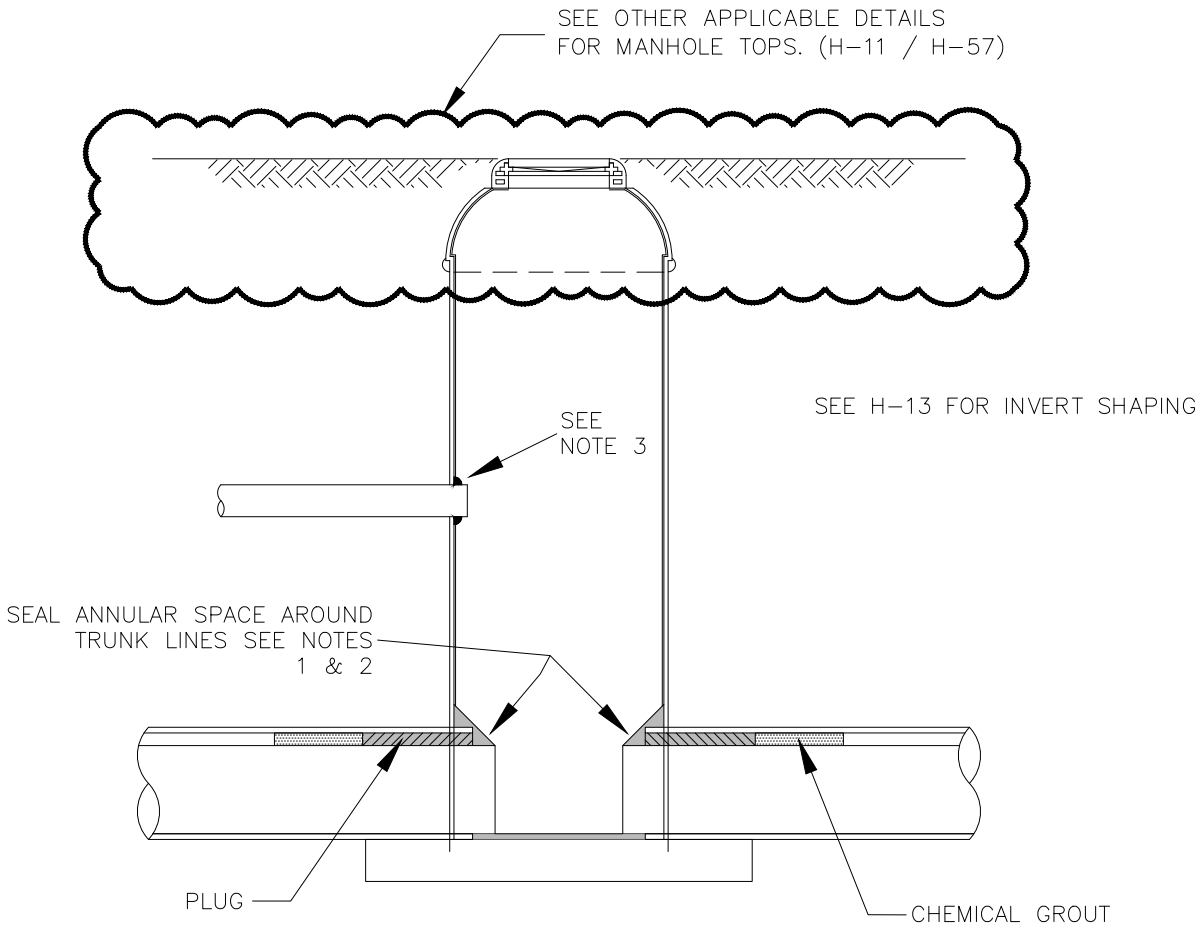

NOTES:

1. IF A GAP IS PRESENT AROUND THE TRUNK LINE, USE "OAKUM SOAKUM" TO PLUG THE ENTIRE GAP AROUND THE PIPES AND SEAL THE FACE WITH CEMENTITIOUS MORTAR, INSTALL A "STINGER" TO INJECT CHEMICAL GROUT TO SEAL ANNULAR SPACE.

2. IF NO GAP IS PRESENT AROUND THE TRUNK LINE, DRILL THRU THE EXISTING PLUG AROUND THE TRUNK LINE AND INSTALL A "STINGER" TO INJECT CHEMICAL GROUT TO SEAL ANNULAR SPACE.

3. SEAL GAPS AROUND INCOMING SERVICE LINES THROUGH THE FIBERGLASS SECTION OF THE MANHOLE BY INJECTING CHEMICAL GROUT AROUND THE SERVICE LINE TO SEAL GAP AND INSTALL A CEMENTITIOUS RING AROUND THE SERVICE LINE (INSIDE). THE WIDTH OF THE RING SHALL BE EQUAL TO THE DIAMETER OF THE SERVICE LINE AND SHALL BE 1" IN THICKNESS.
MANHOLE ENTRY SADDLE MAY BE INSTALLED WITH ENGINEER'S APPROVAL.

MANHOLE REHABILITATION
TYPICAL FIBERGLASS MANHOLE

CITY OF BEAUMONT
WATER UTILITIES DEPARTMENT
N.T.S.

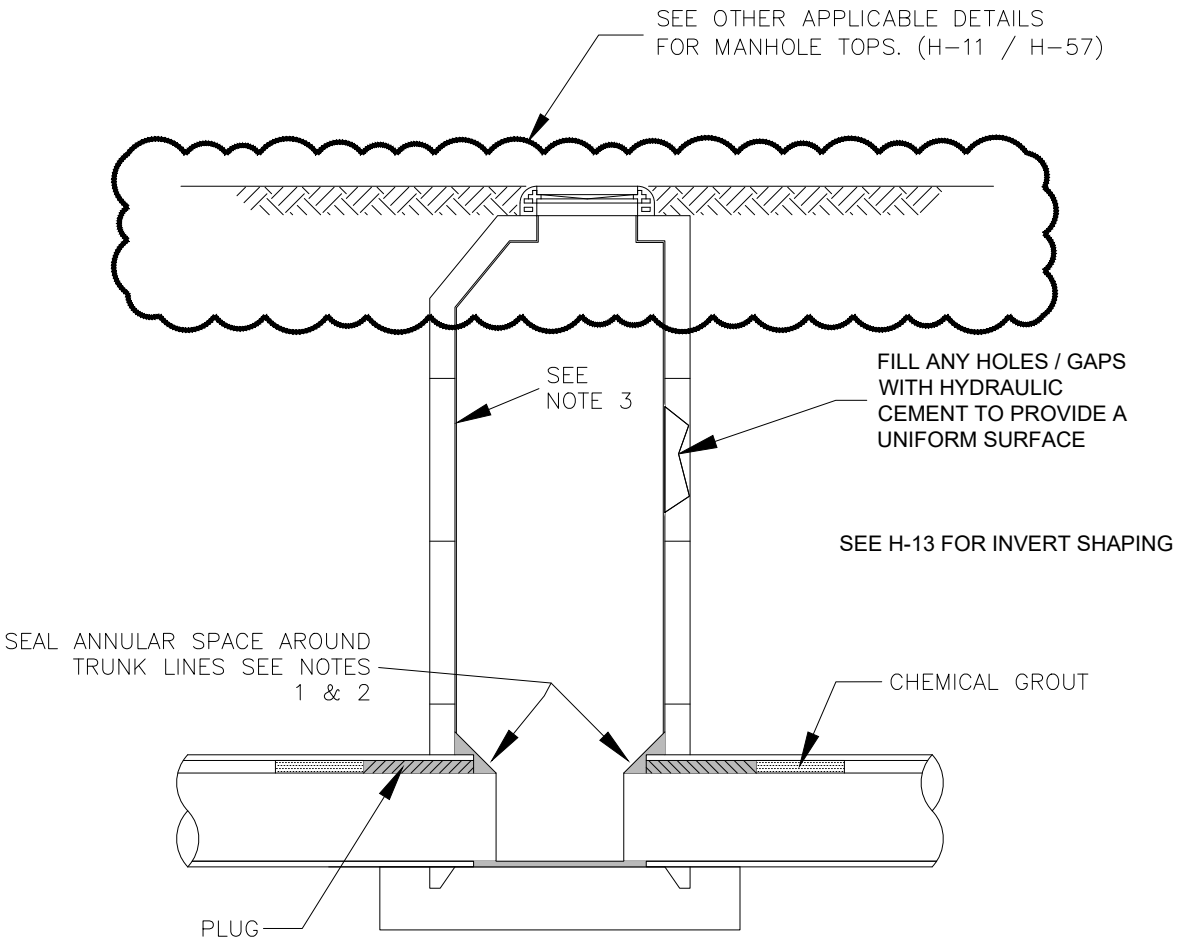

NOTES:

1 IF A GAP IS PRESENT AROUND THE TRUNK LINE, USE "OAKUM SOAKUM" TO PLUG THE ENTIRE GAP AROUND THE PIPES AND SEAL THE FACE WITH CEMENTITIOUS MORTAR, INSTALL A "STINGER" TO INJECT CHEMICAL GROUT TO SEAL ANNULAR SPACE.

2 IF NO GAP IS PRESENT AROUND THE TRUNK LINE, DRILL THRU THE EXISTING PLUG AROUND THE TRUNK LINE AND INSTALL A "STINGER" TO INJECT CHEMICAL GROUT TO SEAL ANNULAR SPACE.

3 IF THE MANHOLE WALLS ARE IN POOR CONDITION, REMOVE ANY EXISTING EPOXY LINING FROM ALL MANHOLE SURFACES AND LINE THE ENTIRE MANHOLE WITH CEMENTITIOUS MORTAR, 1" THICK.

MANHOLE REHABILITATION
TYPICAL PRECAST CONCRETE MANHOLE

CITY OF BEAUMONT
WATER UTILITIES DEPARTMENT
N.T.S.

NOTE:
CONTRACTOR TO INJECT CHEMICAL GROUT AROUND SERVICE LINE PRIOR TO INSTALLING THE MORTAR RING.

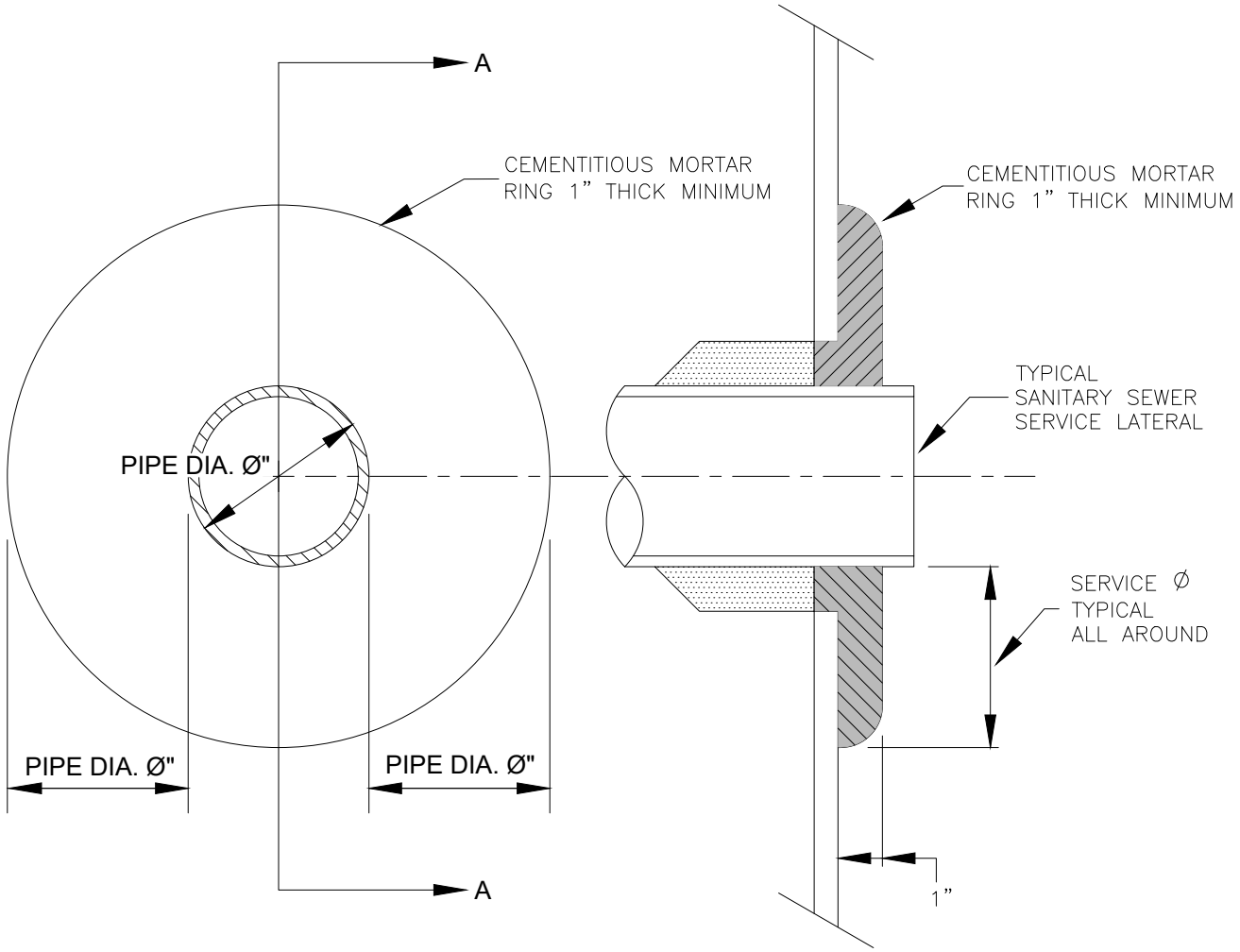

SECTION A-A

MANHOLE REHABILITATION SERVICE LATERAL SEAL

CITY OF BEAUMONT
WATER UTILITIES DEPARTMENT
N.T.S.

REVISED: 08/13/2019

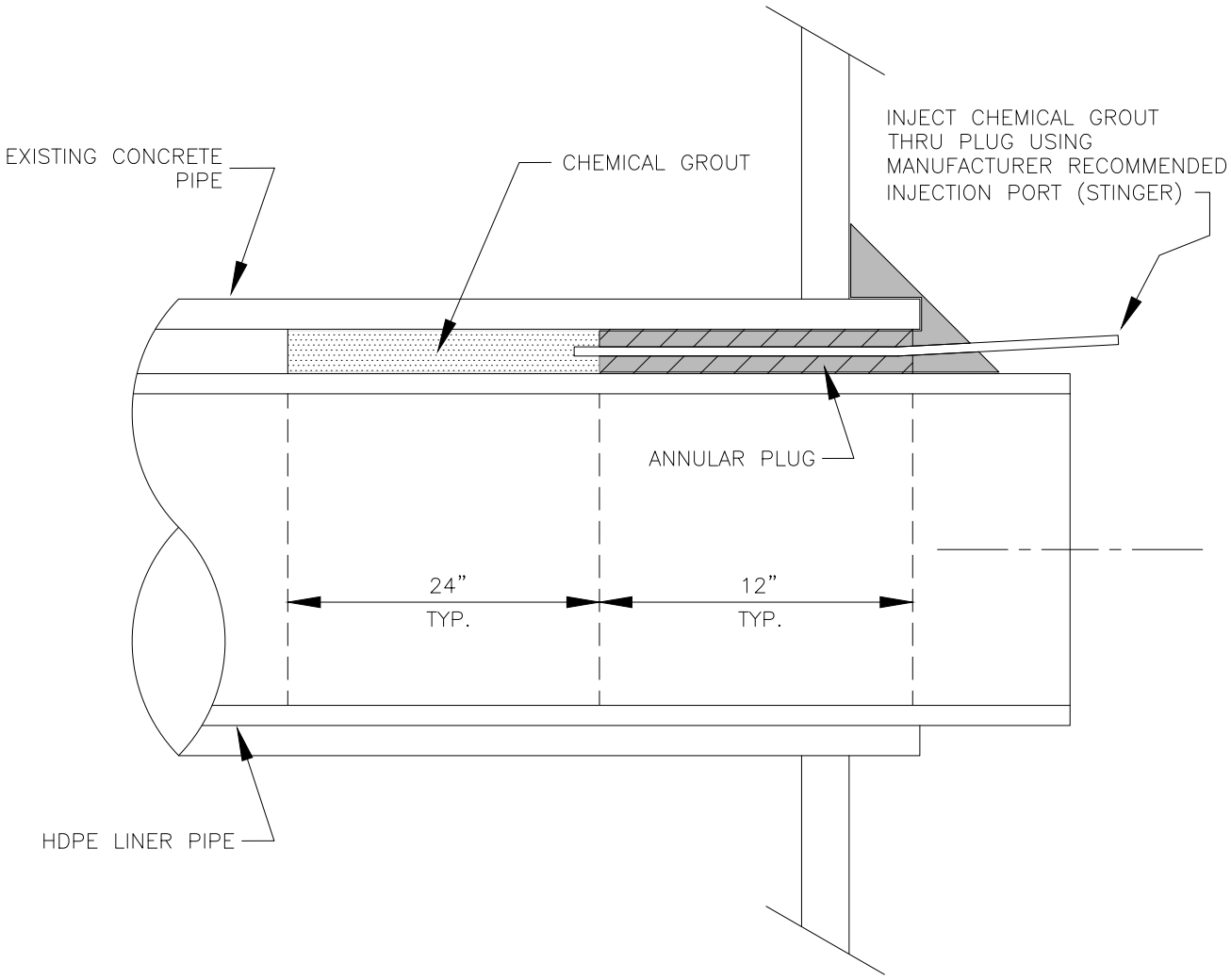

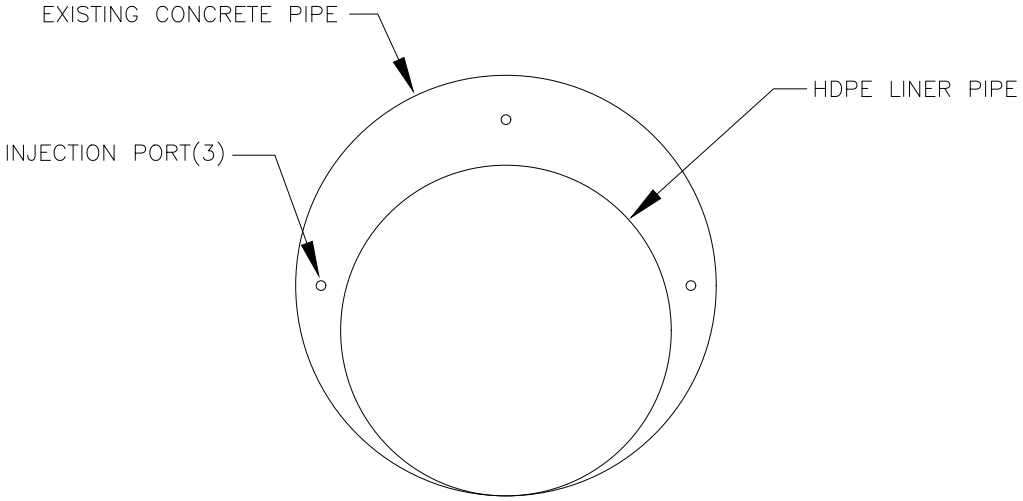

MANHOLE REHABILITATION
ANNULAR SEAL

CITY OF BEAUMONT
WATER UTILITIES DEPARTMENT
N.T.S.

REVISED: 08/13/2019

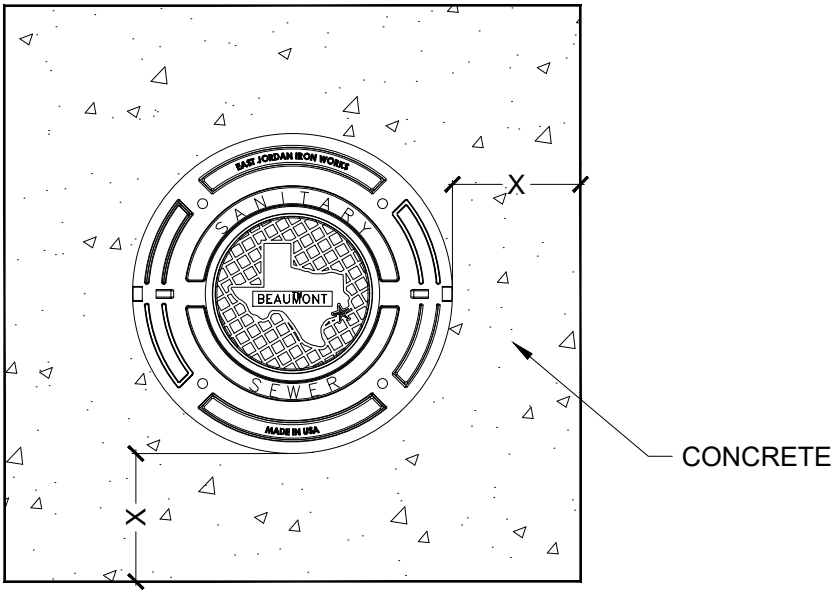

NOTE:
X = 12" FOR 32" COVER
X = 16" FOR 24" COVER

TOP VIEW MH DETAIL

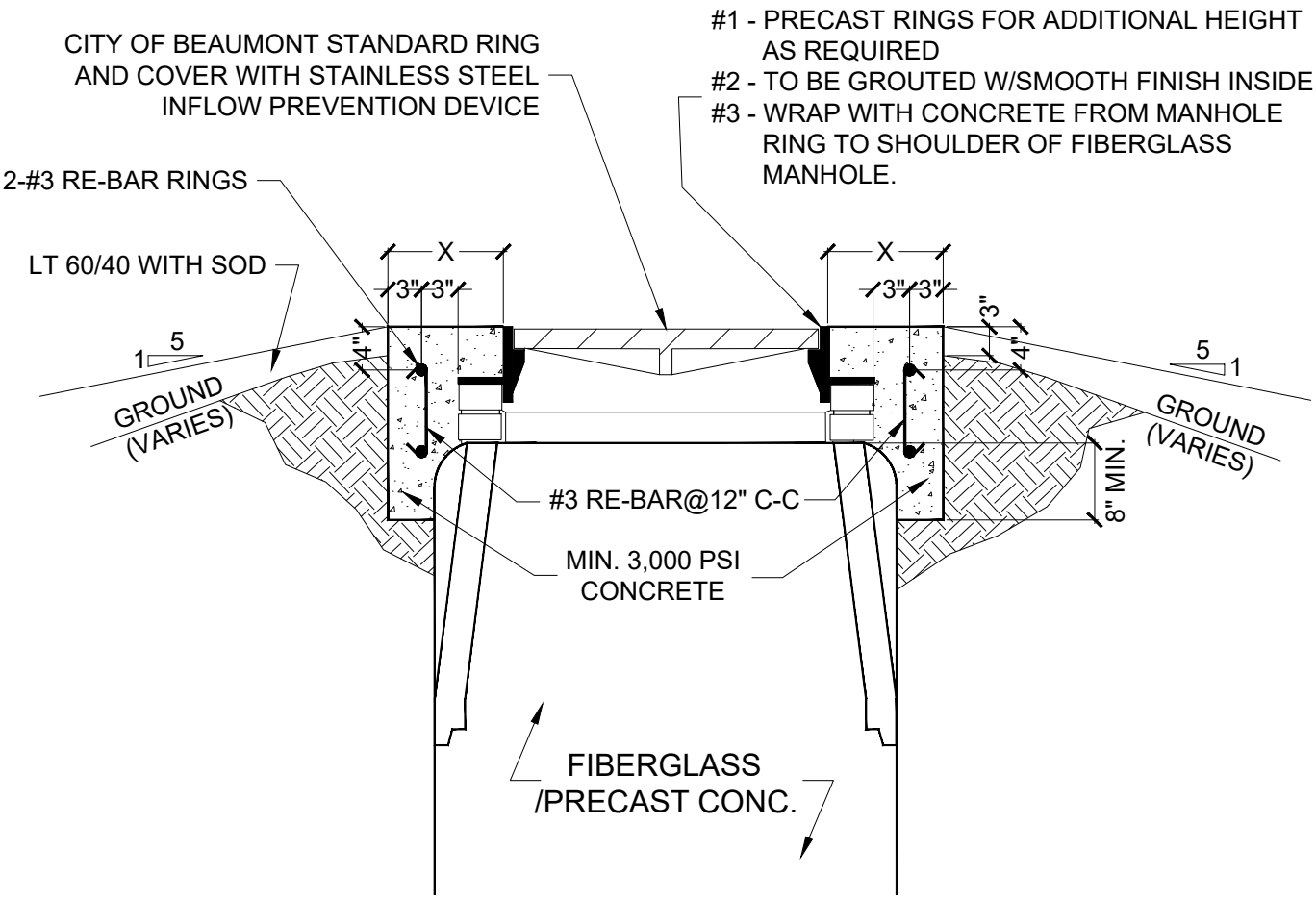

SQUARE MANHOLE TOP DETAIL
(AS REQUIRED BY ENGINEER)

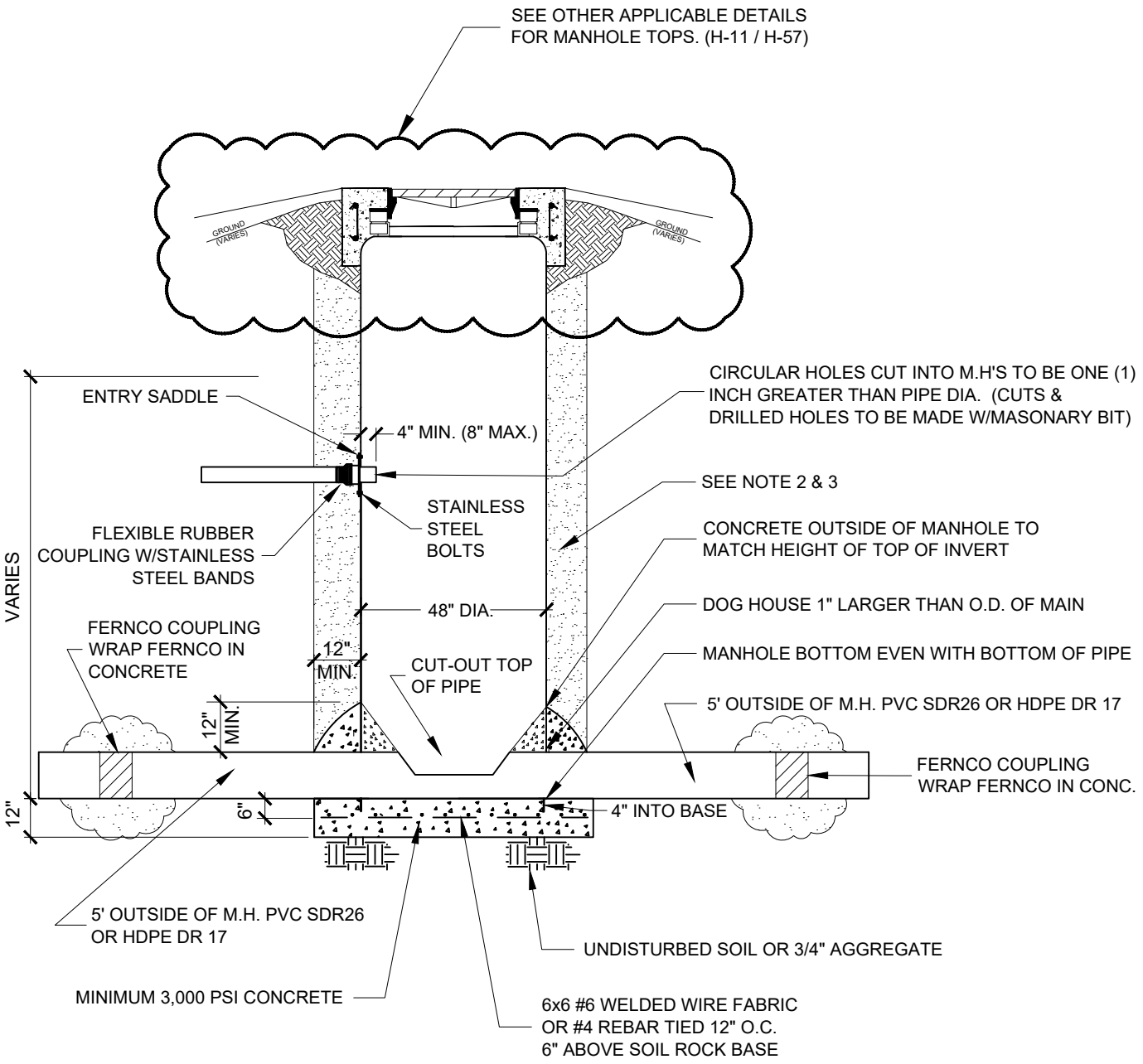

NOTE:

1. INSTALLATION SHALL BE COMPLY WITH MANUFACTURES RECOMMENDED INSTALLATION INSTRUCTIONS.
2. IF FIBERGLASS MANHOLE IS INSTALLED WITHIN 5' OF THE ROADWAY THEN STABILIZED SAND NEEDS TO BE USED FOR BACKFILLING.
3. IF FIBERGLASS MANHOLE IS INSTALLED BEYOND 5' THEN SELECT BACKFILL CAN BE USED.
4. IF MANHOLE IS PLACED IN THE DITCH, SEE H-1 (PRECAST MANHOLE DETAIL)

NEW MANHOLE ON EXISTING CONCRETE OR VITRIFIED CLAY PIPE

CITY OF BEAUMONT
WATER UTILITIES DEPARTMENT
N.T.S.

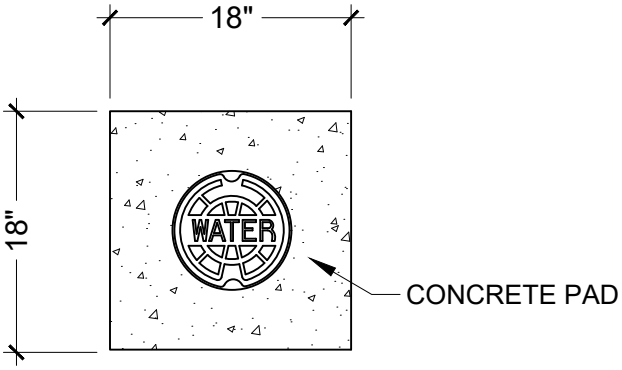

TOP VIEW

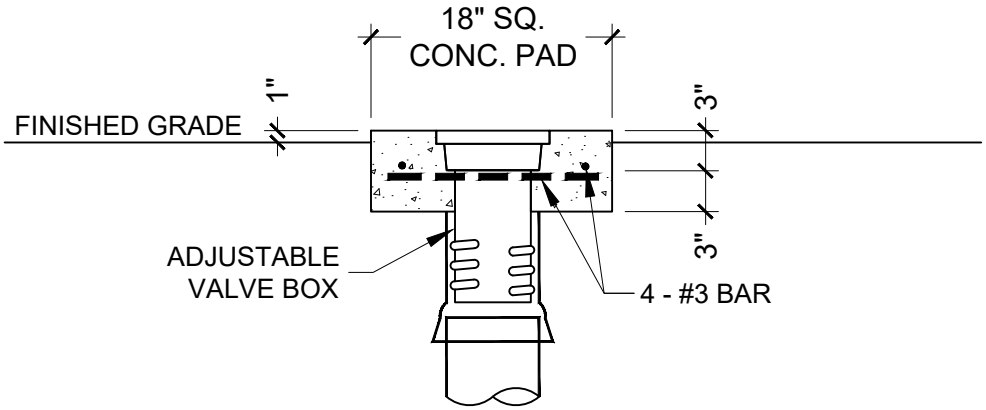

- CLASS A CONCRETE

VALVE BOX PROTECTION DETAIL FOR OUTSIDE OF PAVEMENT

CITY OF BEAUMONT
WATER UTILITIES DEPARTMENT
N.T.S.

REVISED: 11/1/2019

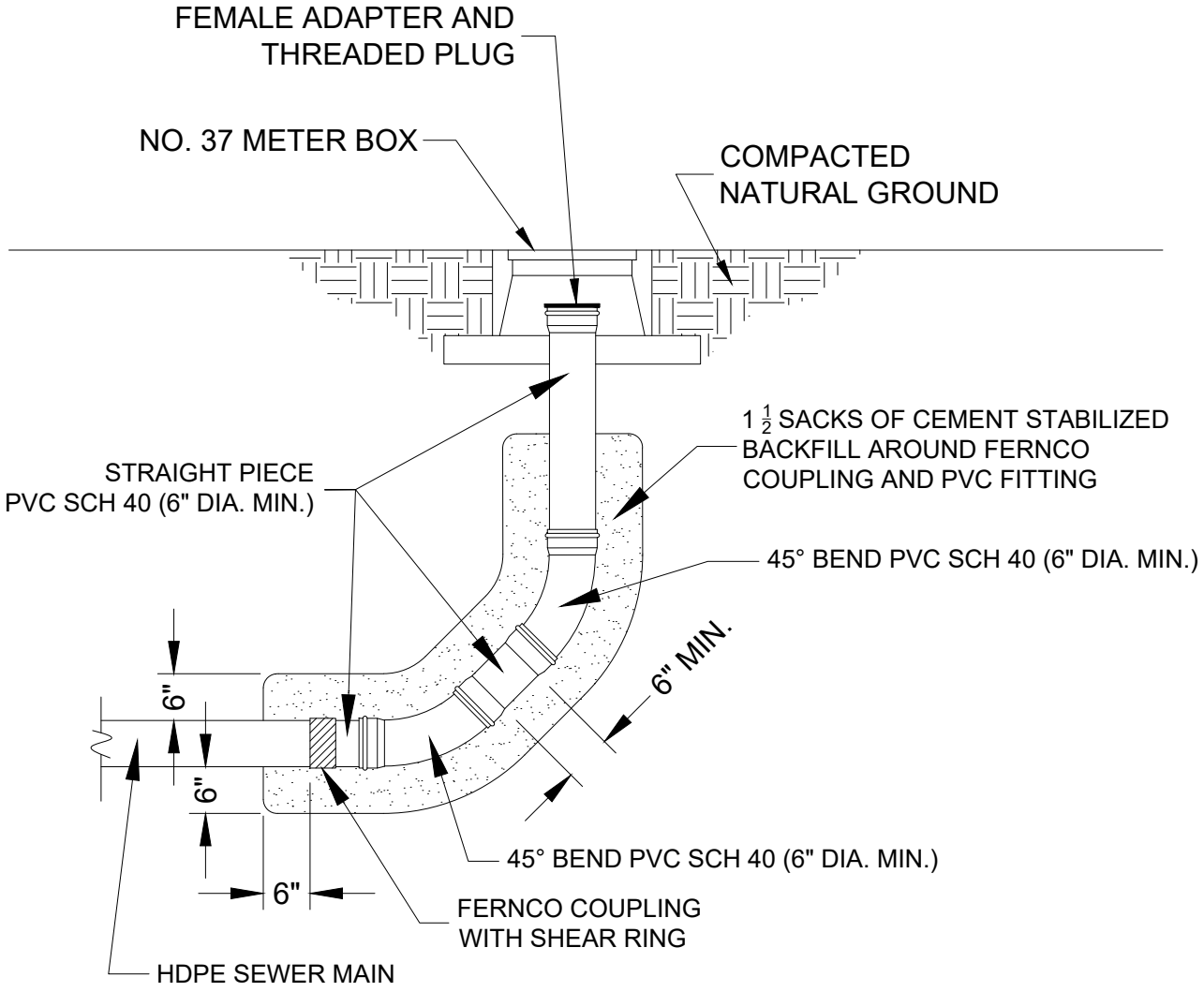

NOTE:

* NO. 37 METER BOX WITH FIBER CONCRETE MIX -(FIBER TO BE ADDED TO MIX - 1.5 LBS. PER CU. YD.). METER BOX COVER TO BE MARKED "SEWER".

* WRAP FERNCO COUPLING & PVC FITTINGS IN STABILIZED SAND 6" MINIMUM IN ALL DIRECTIONS.

END-OF-LINE CLEANOUT ON NEW OR REHABILITATED SEWER MAIN

CITY OF BEAUMONT
WATER UTILITIES DEPARTMENT
N.T.S.

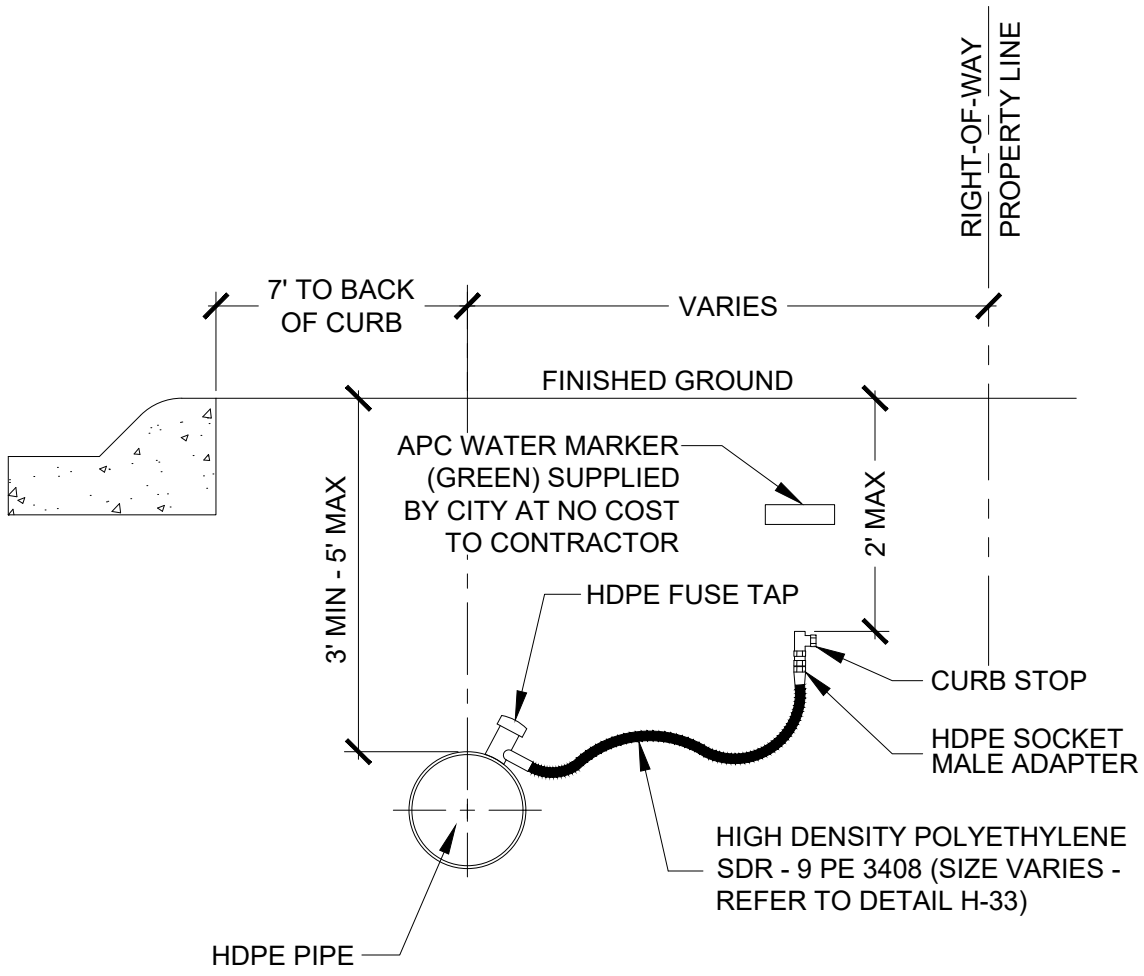

GENERAL NOTES:

1. POSITION SADDLE AT APPROXIMATELY 45° ANGLE.

TYPICAL HDPE WATER SERVICE CONNECTION

ITEM 4015

PLUG ABANDONED SEWERS

4015.01 - INTENT

It is the intent of this specification to provide for the plugging of abandoned sewer lines, or the repair of existing plugs, at points indicated on the plans or designated by the Owner's Representative.

4015.02 - GENERAL

Each designated abandoned sewer line shall be plugged at its entrance into a manhole or junction box, or at such other point as may be designated. The Contractor may use a prefabricated plug of approximately the diameter of the pipe; Class B Concrete as specified by the Texas State Department of Highways and Public Transportation; or any other method acceptable to the Owner's Representative.

The Contractor shall seal around the plug with a approved adhesive so as to make the entire plug permanently watertight.

Where designated, the Contractor shall remove and replace existing plugs, or shall repair or seal them to make them watertight.

4015.03 - MATERIALS

All material used for plugs or adhesives shall be impermeable and shall be resistant to chemicals, temperature cycles, and wet-dry cycles. These materials shall not be brittle or biodegradable.

4015.04 - PAYMENT

No separate payment will be made for plugging abandoned sewers in the course of new sewer construction. This work shall be included in the applicable sewer and manhole costs.

End of Section